DEVILBISS

SB-E-2-251 **ISS.05**

CE Ex II 2 G X

Operation Manual

JGA – Pressure Feed Spraygun



E	P 2 - 8

E DEVILBISS

Operation Manual

JGA – Pressure Feed Spraygun

Important

Read and follow all instructions and Safety Precautions before using this equipment

Description

The JGA Pressure Feed Spraygun Kit is approved to ATEX regulations **94/9/EC**, protection level;

II 2 G X Suitable for use in Zones 1, and 2

Important: *These Sprayguns are suitable for use with most solvent based coating materials. Nozzles and Needles are manufactured in Stainless Steel. These guns are not designed for use with highly corrosive and/or abrasive materials and if used with such materials it must be expected that the need for cleaning and/or replacement of parts will be increased. If there is any doubt regarding the suitability of a specific material contact your local Distributor or ITW Finishing direct.*

Model Part Number

Example: **JGA-558FWH-797**

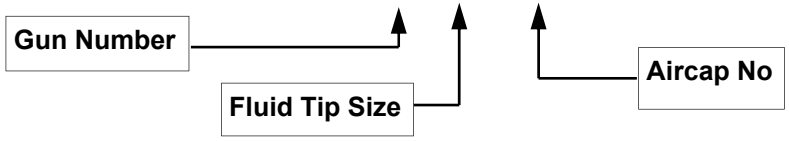

EC Declaration of Conformity

We: **ITW Finishing UK, Ringwood Rd, Bournemouth, Dorset, BH11 9LH, UK**, as the manufacturer of the **Spraygun model JGA**, declare, under our sole responsibility, that the equipment to which this document relates is in conformity with the following standards or other normative documents:

BS EN 292-1 PARTS 1 & 2: 1991, BS EN 1953: 1999; and thereby conform to the protection requirements of Council Directive **98/37/EEC** relating to ***Machinery Safety Directive,*** and;

EN 13463-1:2001, council Directive **94/9/EC** relating to ***Equipment and Protective Systems intended for use in Potentially Explosive Atmospheres*** *protection level* ***II 2 G X***.

B. Holt, General Manager
30th June 2003

ITW Finishing Systems and Products reserve the right to modify equipment specification without prior notice.

© 2007 ITW Finishing Systems and Products

SAFETY WARNINGS

E

Fire and explosion



Solvents and coating materials can be highly flammable or combustible when sprayed. **ALWAYS refer to the coating material suppliers instructions and COSHH sheets before using this equipment**



Users must comply with all local and national codes of practice and insurance company requirements governing ventilation, fire precautions, operation and house-keeping of working areas



This equipment, as supplied, is NOT suitable for use with Halogenated Hydrocarbons.



Static Electricity can be generated by fluid and/or air passing through hoses, by the spraying process and by cleaning non- conductive parts with cloths. To prevent ignition sources from static discharges, earth continuity must be maintained to the spraygun and other metallic equipment used. It is essential to use conductive air and/or fluid hoses.



Personal Protective Equipment



Toxic vapours – When sprayed, certain materials may be poisonous, create irritation or be otherwise harmful to health. Always read all labels and safety data sheets for the material before spraying and follow any recommendations. ***If In Doubt, Contact Your Material Supplier***



The use of respiratory protective equipment is recommended at all times. The type of equipment must be compatible with the material being sprayed.



Always wear eye protection when spraying or cleaning the spraygun



Gloves must be worn when spraying or cleaning the equipment

Training – Personnel should be given adequate training in the safe use of spraying equipment.

Misuse

Never aim a spraygun at any part of the body

Never exceed the max. recommended safe working pressure for the equipment

The fitting of non-recommended or non-original spares may create hazards

Before cleaning or maintenance, all pressure must be isolated and relieved from the equipment

The product should be cleaned using a gun washing machine. However, this equipment should not be left inside gun washing machines for prolonged periods of time.

Noise Levels



The A-weighted sound level of sprayguns may exceed 85 dB (A) depending on the set-up being used. Details of actual noise levels are available on request. It is recommended that ear protection is worn at all times when spraying.

Operating

Spray Equipment using high pressures may be subject to recoil forces. Under certain circumstances, such forces could result in repetitive strain injury to the operator.

© 2007 ITW Finishing Systems and Products

E

Parts List

Ref. No	Description	Part Number	Qty
1	Air Cap/Retaining ring	See Chart 2	1
1a	Spring Clip - Kit of 5	JGA-156-K5	1
+2	Nozzle	See Chart 3	1
3	Baffle + Seal	JGD-402-K	1
+3a	Baffle seal—Kit of 5	GTI-33-K5	1
+4	Spring Adjusted Needle Packing	GTI-445-K2	1
5	Spreader Valve	GTI-405-K	1
6	Stud and Screw - Kit of 5	GTI-408-K5	1
+7	Needle	See Chart 3	1
+8	Spring - Kit of 5	GTI-409-K5	1
9	Bushing	JGA-17	1
10	Needle Adjusting Screw	GTI-414-K	1
11	Valve Assembly	JGK-449	1
12	Trigger	GTI-108	1
13	Connector	JGA-158	1
14	Airflow Valve	GTI-415-K	1
15	Lock Nut - Kit of 5	JGA-51-K5	1
16	Seal	23165-001	1
17	Fluid Inlet Connector and seal Kit	JGA-159-K	1
18	Seal + Pin kit (+ SST-8434-K5)	GTI-428-K5	2
19	Circlip - Kit of 5		2
20	Circlip - Kit of 5	25746-007-K5	1
+21	Seal - Kit of 5	JGS-72-K5	2
22	Air valve stem assembly		1
23	Spring	JGV-262-K5	1

+ - Parts included in service Kit KK-4502 (see accessories)

Chart 2 Aircap number and Nozzle size combinations

No	Order No.	G 0.7	FX 1.1	FZ 1.2	FF 1.4	FW 1.6	EE 1.8	EX 1.8	DE 2.0	D 2.2	AC 2.8	Air-flow	Pressure bar
30+	AV-4239-30	✓			✓			✓				301	3.0
43	AV-4239-43				✓			✓				307	3.0
62	MB-4039-62										✓	449	3.0
64	MB-4039-64									✓		432	3.0
78	MB-4039-78			✓				✓				457	3.0
80	MB-4039-80							✓				311	3.0
186	AV-4239-186					✓		✓				344	3.0
704	AV-4239-704				✓							418	3.0
765	AV-4239-765		✓		✓			✓				476	3.0
777	AV-4239-777		✓		✓							462	3.0
797	AV-4239-797	✓	✓	✓	✓							463	3.0

© 2007 ITW Finishing Systems and Products

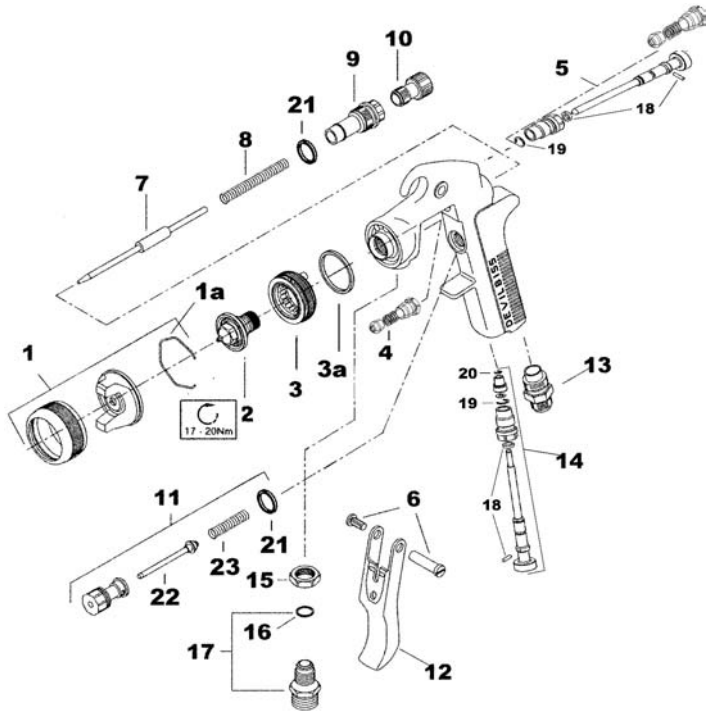

Chart 3

Nozzle and Needle combinations

High Grade Stainless Steel (H)		
Nozzle size	**Nozzle Order No.**	**Needle Order No.**
2.8	AV-645-AC	JGA-421-C-K
2.2	AV-645-D	JGA-421-DEX-K
2.0	——	——
1.8	——	——
1.8	AV-645-E	JGA-421-E-K
1.8	AV-645-EX	JGA-421-DEX-K
1.6	AV-645-FW	JGA-421-FW-K
1.4	AV-645-FF	JGA-421-FFK
1.2	AV-645-FZ	JGA-421-FZ-K
1.1	AV-645-FX	JGA-421-FX-K
0.7	AV-645-G	JGA-421-G-K

High Grade Stainless Steel—Soft Seat	
Nozzle Order No.	**Needle Order No.**
——	——
AV-651-D	JGA-421-DEX-K
——	——
——	——
AV-651-E	JGA-421-E-K
AV-651-FF	JGA-421-FZ-K
AV-651-FZ	JGA-421-FZ-K
AV-651-FX	JGA-421-FZ-K
AV-651-G	JGA-421-G-K

Nitralloy (N)	
Nozzle Order No.	**Needle Order No.**
AV-611-AC	JGA-402-NAC-K
AV-611-D	JGA-402-NADEX-K
AV-611-DE	JGA-402-NADEEE-K
AV-611-EE	JGA-402-NADEEE-K
——	——
——	——
——	——
AV-611-FF	JGA-402-NAFF-K
AV-611-FZ	JGA-402-NAFZ-K
——	——
——	——

© 2007 ITW Finishing Systems and Products

E

Specification

Air supply connection -
Universal $^1/_4$ BSP/NPS
Fluid Supply Connection -
Universal $^3/_8$ BSP/NPS
Maximum static inlet pressure -
P1 = 9 bar (130 psi)
Maximum static fluid pressure -
P2 = 14 bar (200psi)
Gun Weight - 695 g

Maximum Service temperature - **40°C**

Materials of Construction

Gun body- Polished Aluminium

Nozzle - See chart 3

Needle - See chart 3

Installation

1. Attach air hose to connector (13). Recommended hose size 8 mm bore. The hose must be conductive and electrical bond from the spraygun to earth should be checked with an ohmeter. A resistance of less than $10^6\Omega$ is recommended. The air supply should be filtered and regulated.
2. Attach fluid supply hose to the Fluid Inlet connector (17).

Operation

Mix, prepare and filter the coating material to be sprayed to the manufacturer's instructions. Adjust the spray gun controls, air and coating material pressures before filling the cup or turning on the material supply.

1. **Needle adjustment.** Fully open needle adjusting screw (10) by turning counter-clockwise until the first thread shows.
2. **Fan pattern adjustment.** Turn adjusting screw (5) to fully open position, by turning counter-clockwise.
3. **Air control valve.** Open air adjusting screw (14) fully by turning counter-clockwise (JGA-558 models only).
4. **Air supply pressure.** Regulate to 3.0 bar (43 - 45 lbf/in²).
5. **Pressure feed coating material supply.** Regulate pressure to 0.5 bar (7 lbf/in²).
6. Turn on coating material and air supplies.
7. **Test spray.** If the finish is too dry or application too slow, reduce air pressure or increase coating material supply pressure. If the finish is too wet, reduce the coating material supply pressure, or turn the needle adjusting screw (10) fully clockwise then gradually open until the desired pattern is achieved.
8. If the atomisation is too coarse increase the air pressure, if too fine, reduce the air supply pressure or turn air control valve (14) gradually clockwise.
9. **NOTE:** The spray width can be reduced from fan to round by turning fan adjusting screw (5) clockwise.
10. **Using the spray gun.** Hold the gun perpendicular to the spray surface always. Arcing or tilting the gun will result in an uneven deposit of coating material. The recommended spray distance is 150- 200 mm (6" - 8"). Spray the corners and edges first.

© 2007 ITW Finishing Systems and Products

Overlap each stroke 50% as you coat the area. Trigger just before the edge of the surface to be sprayed. Move the gun at a constant speed across the surface and release the trigger. Repeat the same method on the return stroke.

11. To prevent accidental discharge of coating material when the gun is not in use, always turn off and release air and fluid pressure.

Preventative Maintenance

1. Turn off air and relieve pressure in the supply lines, or if using QD system, disconnect from airline.
2. Release Cup and raise the tube out of the material. Trigger the Gun and allow material to drain back into the cup.
3. Dispose of the surplus material and clean the cup.
4. Remove air cap (1) and clean. If any of the holes in the cap are blocked with coating material use a toothpick to clean. Never use metal wire which could damage the cap and produce distorted spray patterns
5. Ensure the tip of the nozzle (2) is clean and free from damage. Build up of dried paint can distort the spray pattern.
6. Lubrication – stud/screw (6), needle (7) and air valve (11) should be oiled each day.

Replacement of Parts

Nozzle (2) and Needle (7) – Remove parts in the following order: 10, 8, 7, 1 and 2. Replace any worn or damaged parts and re-assemble in reverse order. Recommended tightening torque for nozzle (2) 17-20 Nm (150-180 lbf in)

Packing – Remove parts 10, 8, 7. Unscrew cartridge (4). Fit new cartridge finger tight. Re-assemble parts 7, 8, and 10 and tighten cartridge (4) with spanner sufficient to seal but to allow free movement of needle. Lubricate with gun oil.

Air valve (11) – Remove Trigger, parts 6 and 12. Unscrew valve assembly. Re-assemble, fitting spring to valve head before fitting valve.

Spreader valve (5) – Caution: always ensure that the valve is in the fully open position by turning screw fully counter-clockwise before fitting to body.

Accessories

Spanner – order SPN-5
Cleaning Brush – order 4900-5-1-K3
Service Kit – order KK-4502 add nozzle size as required (i.e. KK-4502-FF-H)
Seal Kit - order KK-4558. Contains 3a, 4, 18, 19, 21
Pressure gauge Attachment – order GA-515
Gun Mounted Regulator – order DVR-501
Lubricant - order GL-1-K10

© 2007 ITW Finishing Systems and Products

BINKS
DVP 1:1 RATIO DIAPHRAGM PUMP PACKAGES





- Rapid delivery of up to 17 litres per minute (max)
- Even material flow at up to 60 cycles/minute
- Economic air consumption at pressures up to 7 bar (100 psi)
- Corrosion resistant models for ceramic/abrasive materials
- Functions as a material transfer or delivery pump
- Choice of pail, wall, tripod or cart mounted outfits
- ATEX/CE approved.

PRESSURE FEED TANKS & CUPS

- Sizes to suit all applications
- 10, 40 & 60 litre capacity tanks complete with nylon inner container for easy colour changes and cleaning
- Stainless steel and mild steel options
- Compatible with your standard gun and hose connections
- Remote pressure cups – aluminium and stainless steel options 2 litre capacity
- ATEX/CE approved.



ITW Industrial Finishing – Masters of Finishing Technology
www.itwifeuro.com

ITW Finishing Systems and Products
Ringwood Road,
Bournemouth,
BH11 9LH,
England.
Tel. No. (01202) 571111
Telefax No. (01202) 581940,
Website address http://www.itweuropeanfinishing.com

ITW Oberflächentechnik GmbH & Co. KG
Justus-von-Liebig-Straße 31
63128 Dietzenbach
Tel (060 74) 403-1
Telefax: (060 74) 403300
Website address http://www.itw-finishing.de

ITW Automotive Finishing UK
Anchorbrook Industrial Estate
Lockside
Aldridge,
Walsall,
UK.
Tel. No. (01922) 423700
Telefax No. (01922) 423705,
Website address http://www.itweuropeanfinishing.com

ITW Surfaces Et Finitions
163-171 avenue des Auréats B.P. 1453
26014 VALENCE CEDEX FRANCE
Tél. (33) 475-75-27-00
Télex 345 719F DVILBIS
Téléfax: (33) 475-75-27-99

ITW Finishing Systems and Products is a Division of ITW Ltd. Reg. Office:
Admiral House,
St Leonard's Road,
Windsor,
Berkshire,
SL4 3BL,
UK
Registered in England: No 559693 Vat No 619 5461 24

© 2007 ITW Finishing Systems and Products