DEVILBISS Pro Lite™

# Pro Lite™ E

# Conventional, Air Atomisation Manual Spray Gun.

CE Ex II 2 G X

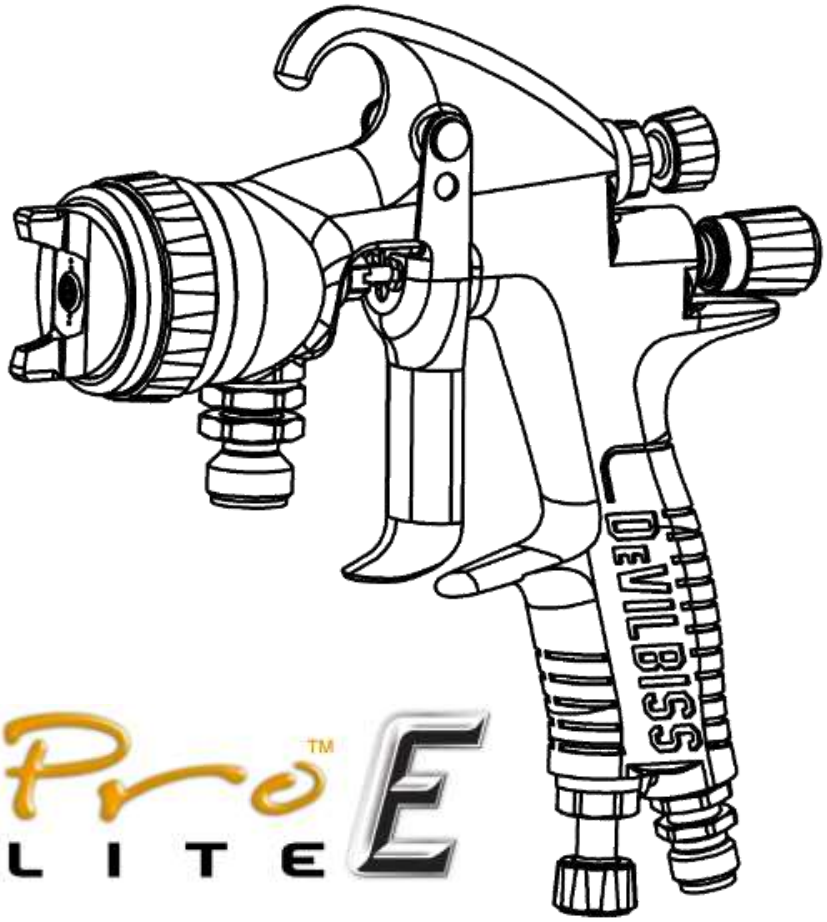


**IMPORTANT! DO NOT DESTROY**

It is the Customer's responsibility to have all operators and service personnel read and understand this manual.

Contact your local DeVilbiss representative for additional copies of this manual.

**READ ALL INSTRUCTIONS BEFORE OPERATING THIS DEVILBISS PRODUCT.**

## FUNCTIONAL DESCRIPTION

The DeVilbiss Pro Lite™ E Conventional hand gun is primarily designed for the application of Ceramic and Enamel coatings in a high production environment. If used with such materials it must be expected that the need for cleaning and or replacement of parts will be increased. Its particular materials of construction make it suitable for materials supplied from pumped or pressure fed fluid supply systems.

Available with a range of stainless steel, nitride hardened and tungsten carbide fluid tips and needles, the gun features stainless steel fluid passageways and a QuickClean™ coated body, to give enhanced corrosion protection in these arduous conditions.

Based on the Pro Lite™ drop forged aluminium gun body, the gun utilises an 'in-line' concentric air valve which allows weight reduction and reduced fatigue to the operator.

The gun is designed as a flexible solution for the modern coating applicator.

## SPECIFICATIONS

| FLUID AND AIR INLET PRESSURES | |
|---|---|
| P1 = Max Air Input Pressure | 12 Bar [175 psi] |
| P2 = Max Fluid Input Pressure | 15 Bar [217 psi] |

| ENVIRONMENTAL | |
|---|---|
| Max Ambient Operating Temperature | 40°C Nominal [104°F] |

| MATERIALS OF CONSTRUCTION | |
|---|---|
| Fluid Passageways | Stainless Steel |
| Gun Body Material | Quickclean™ Coated Aluminium |
| Air Cap Material | Electroless Nickel Plated Brass |
| Fluid Tip and Needle Construction | Stainless Steel<br>Nitride Coated Stainless Steel<br>Tungsten Carbide |
| Seals and O-Rings | HDPE, Viton Extreme |

| CONNECTIONS | |
|---|---|
| P1 = Air Inlet Size | 1/4" Universal |
| P2 = Fluid Inlet Size | 3/8" Universal |

| GUN WEIGHT | |
|---|---|
| WEIGHT | 500g |

| DIMENSIONS | |
|---|---|
| L x H x W mm | 174 x 175 x 18 |

| | |
|---|---|
| **Product Description:** | Pro Lite™ E |
| **This Product is designed for use with:** | Solvent and water based materials |
| **Suitable for use in hazardous area:** | Zone 1 & 2 |
| **Protection Level:** | II 2 G X |
| **Vibration Level:** | N/A |
| **Sound Pressure Level:** | Available on request |
| **Sound Power Level:** | Available on request |
| **Manufacturer:** | Finishing Brands UK,<br>Ringwood Road,<br>Bournemouth, BH11 9LH. UK |

# EU Declaration of Conformity

**We: Finishing Brands UK, declare that the above product conforms with the Provisions of:**

Machinery Directive 2006/42/EC

ATEX Directive 94/9/EC

**by complying with the following statutory documents and harmonised standards:**

BS EN 1953:2013 Atomising and spraying equipment for coating materials - Safety requirements

EN ISO 12100-1:2010 Safety of Machinery - Basic concepts, general principles for design - Basic terminology, methodology

EN ISO 12100-2:2010 Safety of Machinery - Basic concepts, general principles for design - Technical principles

EN 14462:2005+A1:2009 Surface treatment equipment - Noise test code for surface treatment equipment including its ancillary handling equipiment - Accuracy grades 2 and 3

EN ISO 11201:1995 Acoustics - Noise by machinery and equipment - Determination of emission sound pressure levels at a work station and at other specified positions in an essentially free field over a reflecting plane with negligible environmental corrections

EN ISO 20643:2008 Mechanical vibration - Hand held and hand guided machinery - Principles for evaluation of vibration emission

EN ISO 28662-1 Hand-held portable power tools - Measurement of vibrations at the handle

EN 12096:1997 Mechanical vibration - Declaration and verification of vibration emission values

EN1127-1: Explosive atmospheres - Explosion prevention - Basic concepts

EN 13463-1: Non electrical equipment for use in potentially explosive atmospheres - Basic methods and requirements

D Smith (General Manager)
27/10/14

In this part sheet, the words WARNING, CAUTION and NOTE are used to emphasise important safety information as follows:

**EN**

| WARNING | CAUTION | NOTE |
|---|---|---|
| Hazards or unsafe practices which could result in severe personal injury, death or substantial property damage. | Hazards or unsafe practices which could result in minor personal injury, product or property damage. | Important installation, operation or maintenance information. |

## WARNING

Read the following warnings before using this equipment.



SOLVENTS AND COATING MATERIALS. Can be highly flammable or combustible when sprayed. Always refer to the coating material supplier's instructions and safety sheets before using this equipment.



READ THE MANUAL. Before operating finishing equipment, read and understand all safety, operation and maintenance information provided in the operation manual. Users must comply with all local and national codes of practice and insurance company requirements governing ventilation, fire precautions, operation and house-keeping of working areas.



FIRE AND EXPLOSION HAZARD. Never use 1,1,1-Trichloroethane, Methylene Chloride, other Halogenated Hydrocarbon solvents or fluids containing such solvents in equipment with aluminium wetted parts. Such use could result in a serious chemical reaction, with the posibility of explosion. Consult your fluid suppliers to ensure that the fluids being used are compatible with aluminium parts.



STATIC CHARGE. Fluid may develop a static charge that must be dissipated through proper grounding of the equipment, objects to be sprayed and all other electrically conductive objects in the dispensing area. Improper grounding or sparks can cause a hazardous condition and result in fire, explosion or elecrtic shock and other serious injury.



TOXIC VAPOURS. When sprayed, certain materials may be poisonous, create irritation, or are otherwise harmful to health. Always read all labels, safety sheets and follow any recommendations for the material before spraying. If in doubt contact your material supplier.



LOCK OUT / TAG-OUT. Failure to de-energise, disconnect, lock out and tag-out all power sources before performing equipment maintenance could cause serious injury or death.



NOISE LEVELS. The A-weighted sound level of pumping and spray equipment may exceed 85 dB(A) depending on equipment settings. Actual noise levels are available on request. It is recommended that ear protection is worn at all times while equipment is in use.



HIGH PRESSURE CONSIDERATION. High pressure can cause serious injury. Relieve all pressure before servicing. Spray from the gun, hose leaks or ruptured components can inject fluid into your body and cause extremely serious injury.



INSPECT THE EQUIPMENT DAILY. Inspect the equipment for worn or broken parts on a daily basis. Do not operate the equipment if you are uncertain about its condition.



EQUIPMENT MISUSE HAZARD. Equipment misuse can cause the equipment to rupture, malfunction or start unexpectedly and result in serious injury.



GLOVES. Must be worn when spraying or cleaning the equipment.



WEAR SAFETY GLASSES. Failure to wear safety glasses with side shields could result in serious eye injury or blindness.



WEAR RESPIRATOR. The use of respiratory protective equipment is recommended at all times. The type of equipment must be compatible with the material being sprayed.



NEVER MODIFY THE EQUIPMENT. Do not modify the equipment unless the manufacturer provides written approval.

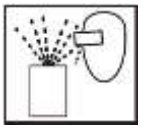

PROJECTILE HAZARD. You may be injured by venting liquids or gases that are released under pressure, or flying debris.



PRESSURE RELIEF PROCEDURE. Always follow the pressure relief procedure in the equipment instruction manual.



KNOW WHERE AND HOW TO SHUT OFF THE EQUIPMENT IN CASE OF AN EMERGENCY.



OPERATOR TRAINING. All personnel must be trained before operating finishing equipment.

**IT IS THE RESPONSIBILITY OF THE EMPLOYER TO PROVIDE THIS INFORMATION TO THE OPERATOR OF THE EQUIPMENT.**

## Pro Lite™ E GUN PART NUMBER FORMAT & PART SELECTION GUIDE

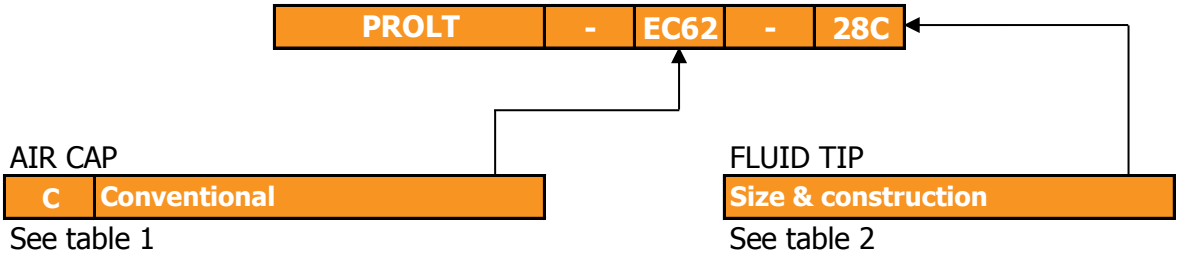


**TABLE 1 - Pro Lite™ E AIR CAP PERFORMANCE GUIDE**

| Air Cap & Type | | Part Number | Air Consumption | Recommended Air Inlet Pressure | Typical Fluid Flow* | Typical Fan Pattern Size** |
|---|---|---|---|---|---|---|
| C62 | Conventional | PROC-120-C62-K | 430 [15.2 cfm] | 3 Bar [45 psi] | < 3.5 L/min | 490mm |
| C64 | Conventional | PROC-120-C64-K | 400 [14.1 cfm] | 3 Bar [45 psi] | < 2.5 L/min | 430mm |
| C67 | Conventional | PROC-120-C67-K | 425 [15.0 cfm] | 3 Bar [45 psi] | < 2.0 L/min | 500mm |

* Flow rates may vary according to paint/material and pressure used.

** Fan pattern size @ 300mm distance.

**TABLE 2 - Pro Lite™ E RECOMMENDED FLUID TIP / AIR CAP COMBINATIONS**

| Air Cap | Atomisation Type | 0.5mm | 0.7mm | 0.85mm | 1.0mm | 1.2mm | 1.4mm | 1.6mm | 1.8mm | 2.0mm | 2.2mm | 2.8mm |
|---|---|---|---|---|---|---|---|---|---|---|---|---|
| C62 | Conventional | - | - | - | - | - | - | - | - | - | - | SNC |
| C64 | Conventional | - | - | - | - | - | - | - | - | - | SNC | - |
| C67 | Conventional | - | - | - | - | - | SN | | SNC | - | - | - |

For ceramic tip & needle part numbers, see table 3.

S= High quality stainless steel tips & needles available in this type & size.

N= Nitride hardened tips & needles also available in this type & size.

C= Tungsten carbide tips & needles also available in this type & size.

**TABLE 3 - CERAMIC FLUID TIPS & NEEDLES**

| Fluid Tip Size | Stainless Steel | | Nitride Hardened | | Tungsten Carbide | |
|---|---|---|---|---|---|---|
| | Fluid Tip | Needle | Fluid Tip | Needle | Fluid Tip | Needle |
| 1.4 | PRO-250-14-K | PRO-350-18-22-K | PRO-250N-14-K | PRO-350N-18-22-K | - | - |
| 1.8 | PRO-250-18-K | | PRO-250N-18-K | | PRO-250C-18 | PRO-350C-18-22 |
| 2.2 | PRO-250-22-K | | PRO-250N-22-K | | PRO-250C-22 | |
| 2.8 | PRO-250-28-K | PRO-350-28-K | PRO-250N-28-K | PRO-350N-28-K | PRO-250C-28 | PRO-350C-28 |

## EXPLODED VIEW

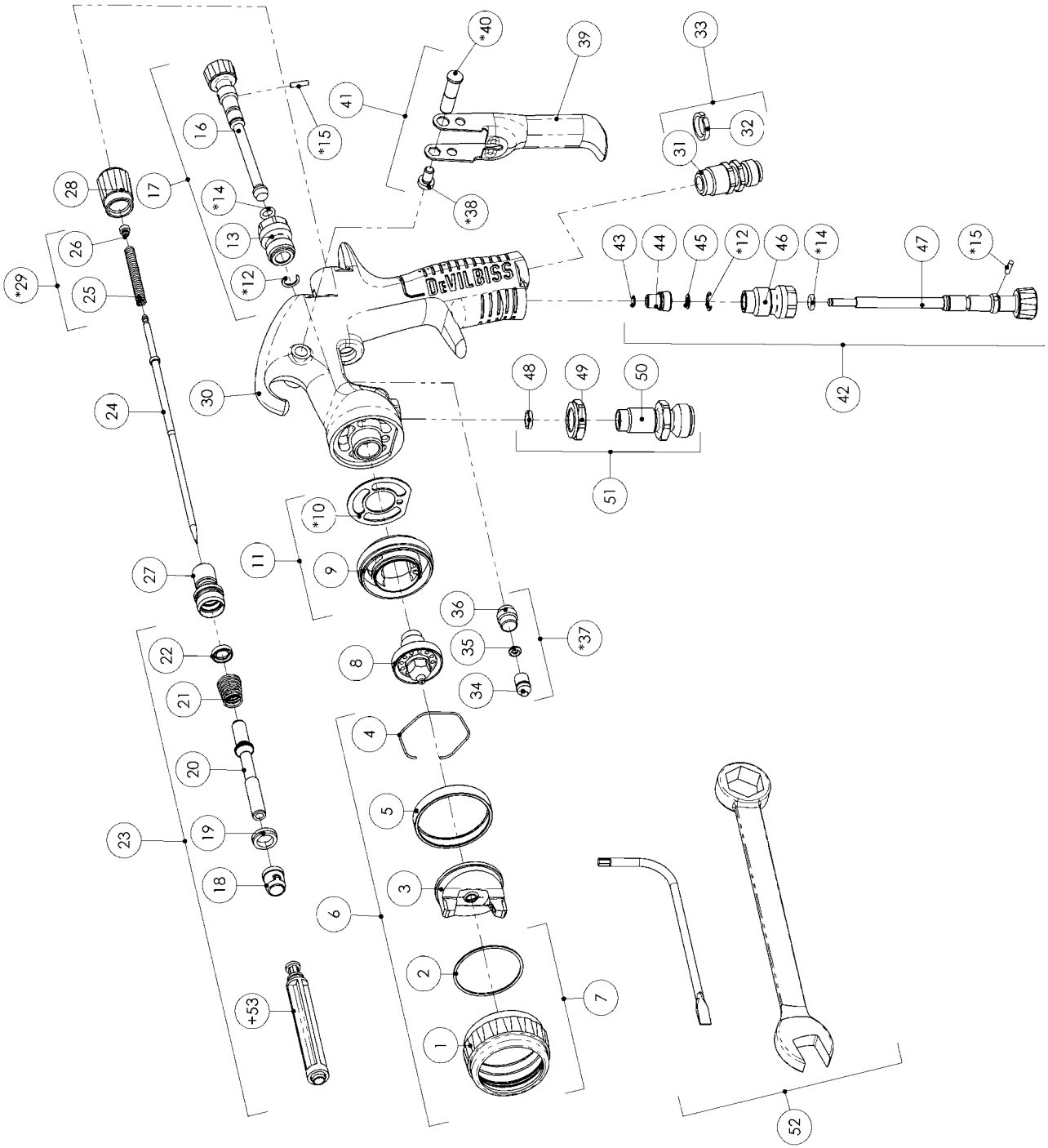

**PARTS LIST**

| REF. | PART No. | DESCRIPTION | QTY. |
|---|---|---|---|
| 1 | - | RETAINING RING | 1 |
| 2 | - | SLIP RING | 1 |
| 3 | - | AIR CAP | 1 |
| 4 | JGA-156-K5 | SPRING CLIP (KIT OF 5) | 1 |
| 5 | - | RETAINING RING SEAL | 1 |
| 6 | SEE TABLE | AIR CAP & RETAINING RING | 1 |
| 7 | PRO-405-K | RETAINING RING SUB ASSEMBLY | 1 |
| 8 | SEE TABLE | FLUID TIP | 1 |
| 9 | - | SPRAYHEAD | 1 |
| *10 | SN-18-1-K2 | GASKET (KIT OF 2) | 1 |
| 11 | SN-69-US-K | SPRAY HEAD KIT | 1 |
| *12 | - | CIRCLIP | 2 |
| 13 | - | VALVE BODY | 1 |
| *14 | - | O RING | 2 |
| *15 | - | SPREADER VALVE PIN | 2 |
| 16 | - | SPREADER VALVE ADJUSTMENT KNOB | 1 |
| 17 | PRO-408-BL-K | SPREADER VALVE ASSEMBLY | 1 |
| 18 | - | FRONT VALVE SEAL | 1 |
| 19 | - | VALVE SEAT | 1 |
| 20 | - | SPINDLE | 1 |
| 21 | - | AIR VALVE SPRING | 1 |
| 22 | - | REAR VALVE SEAL | 1 |
| 23 | PRO-471 | AIR VALVE KIT | 1 |
| 24 | SEE TABLE | FLUID NEEDLE | 1 |
| 25 | - | NEEDLE SPRING | 1 |
| 26 | - | SPRING PAD | 1 |
| 27 | SN-66-K | HOUSING | 1 |
| 28 | SN-67-BL-K | FLUID ADJUSTING KNOB | 1 |
| *29 | PRO-472-K3 | NEEDLE SPRING KIT | 1 |
| 30 | - | GUN BODY | 1 |
| 31 | - | AIR INLET | 1 |
| 32 | SN-26-K4 | COLOUR ID RING KIT (4 COLOURS) | 1 |
| 33 | SN-9-K | AIR INLET KIT | 1 |
| 34 | - | NEEDLE PACKING | 1 |
| 35 | - | O RING | 1 |
| 36 | - | PACKING NUT | 1 |

## PARTS LIST CONTINUED

| REF. | PART No. | DESCRIPTION | QTY. |
|---|---|---|---|
| *37 | SN-421-K | PACKING, SEAL AND PACKING NUT KIT | 1 |
| *38 | - | TRIGGER SCREW | 1 |
| 39 | - | TRIGGER | 1 |
| *40 | - | TRIGGER STUD | 1 |
| 41 | SP-617-CR-K | TRIGGER STUD & SCREW KIT | 1 |
| 42 | PRO-407-BL-K | AIRFLOW VALVE | 1 |
| 43 | 25746-007-K5 | CIRCLIP (KIT OF 5) | 1 |
| 44 | - | VALVE HEAD | 1 |
| 45 | - | WASHER | 1 |
| 46 | - | VALVE BODY | 1 |
| 47 | - | VALVE ADJUSTING KNOB | 1 |
| 48 | - | SEAL | 1 |
| 49 | - | LOCK NUT | 1 |
| 50 | - | FLUID INLET | 1 |
| 51 | SN-419-K | FLUID INLET KIT | 1 |
| 52 | SN-406 | TOOL KIT | 1 |
| +53 | - | AIR VALVE SERVICE TOOL | 1 |

## SERVICE PARTS

| | |
|---|---|
| PRO-470 | SPRAY GUN REPAIR KIT (INCLUDES ITEMS MARKED *) |
| GTI-428-K5 | SEAL AND PIN KIT, KIT OF 5 (ITEMS 12, 14 & 15) |

\+ *NOT INCLUDED IN THE GUN KIT, ONLY WITH REF 23*

**⚠ WARNING**

The spray gun must be earthed to dissipate any electrostatic charges which may be created by fluid or air flows. This can be achieved through the spray gun mounting, or conductive air/fluid hoses. Electrical bond from the spray gun to earth should be checked and a resistance of less than $10^6$ Ohms is required.

## START-UP SEQUENCE

1. Connect the gun to a clean, moisture and oil free air supply using a conductive hose of at least 8mm I.D.

2. Connect the fluid supply hose to fluid inlet connector.

3. Mix coating material to Manufacturer's instructions and strain material.

4. Turn fluid adjusting knob (28) clockwise to prevent fluid needle movement.

5. Turn spreader valve adjusting knob (16) counter clockwise to fully open.

6. Adjust inlet air pressure if required.

7. Turn fluid adjusting knob counter clockwise until first thread shows.

8. Test spray. If the finish is too dry, reduce airflow by reducing air inlet pressure.

9. If finish is too wet, reduce fluid flow by turning fluid adjusting knob (28) clockwise. If atomisation is too coarse, increase air inlet pressure. If too fine, reduce inlet pressure.

10. The pattern size can be reduced by turning spreader valve knob (16) clockwise.

11. Hold gun perpendicular to surface being sprayed. Arcing or tilting may result in uneven coating.

12. The recommended spray distance is 150-200mm.

13. Spray edges first. Overlap each stroke a minimum of 75%. Move gun at a constant speed.

14. Always turn off air supply and relieve pressure when gun is not in use.

| NOTE |
| --- |
| Depending on hose length, larger I.D. hose may be required. Install an air gauge at the gun handle. When gun is triggered on, adjust regulated pressure as required. Do not use more pressure than is necesarry to atomise the material being applied. Excess pressure will create additional overspray and reduce transfer efficiency. |

| NOTE |
| --- |
| If quick connect couplings are required, use only high flow quick connects. Other types will not flow enough air for correct gun operation. |

## SPRAY GUN MAINTENANCE & CLEANING

To clean air cap and fluid tip, brush exterior with a stiff bristle brush. If necesarry to clean cap holes, use a broom straw or toothpick if possible. If a wire or hard instrument is used, extreme care must be taken to prevent scratching or burring of the holes which will cause a distorted spray pattern.

To clean fluid passages, remove excess material, then flush with gun wash solution. Wipe the gun exterior with a dampened cloth. Never completely immerse in any solvent or cleaning solutions as this is detrimental to the lubricants and life of the spray gun.

## SPRAY GUN DISASSEMBLY / ASSEMBLY

| KEY | |
| --- | --- |
|  | Order for disassembly<br>- see over page<br>*(reverse for assembly)* |
| # | Item Number<br>- see over page |

## DISASSEMBLY TIP & NEEDLE

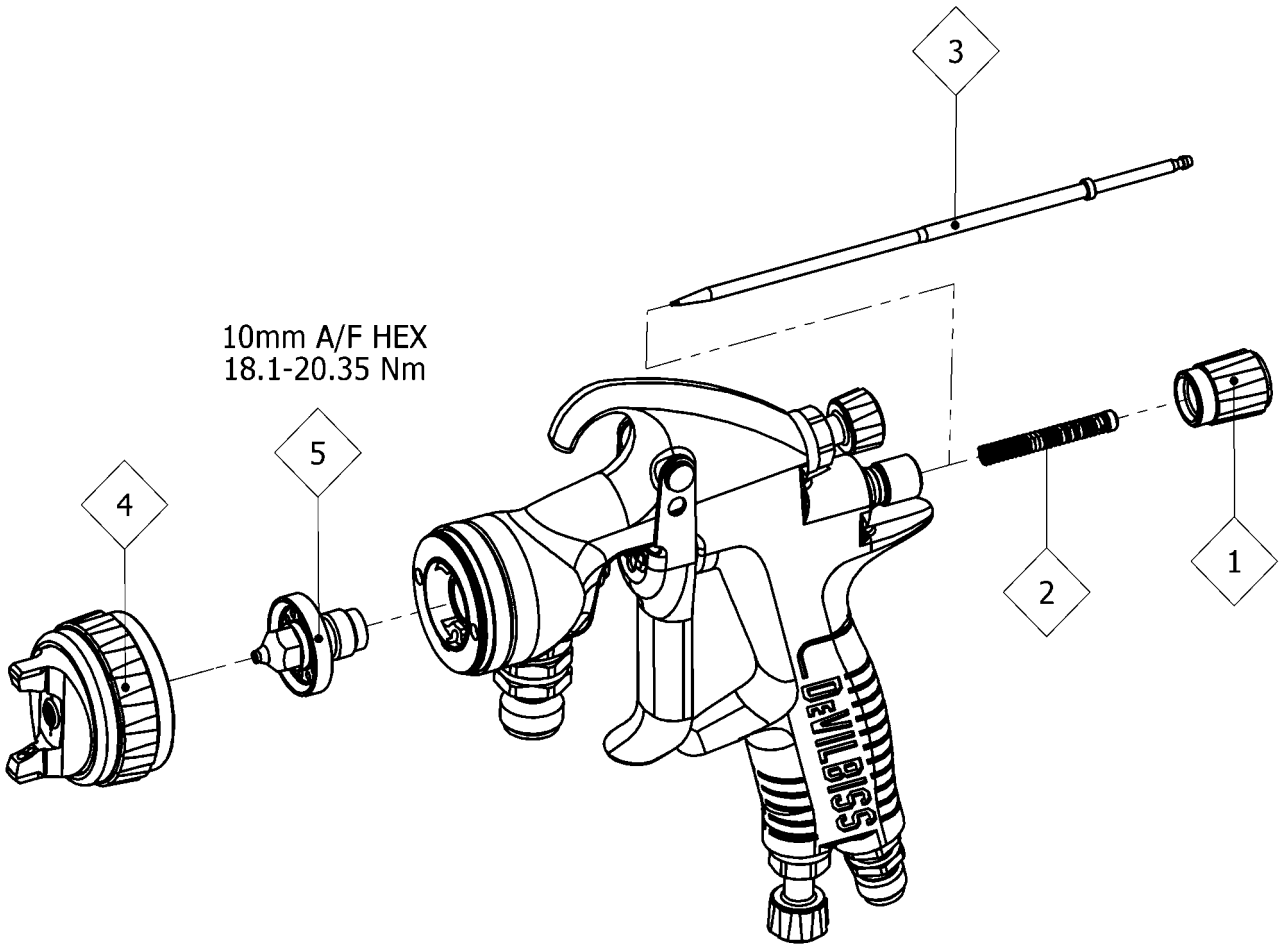


| NOTE |
| --- |
| When replacing the fluid tip or fluid needle, replace tip, needle and fluid packing at the same time. Using worn parts can cause fluid leakage. Do not overtighten. |

| ⚠ CAUTION |
| --- |
| To prevent damage to fluid tip or fluid needle, be sure to either:<br>1. Pull the trigger and hold while tightening or loosening the fluid tip, or,<br>2. Remove the fluid adjusting knob to relieve spring pressure against needle collar. |

## DISASSEMBLY AIR VALVE

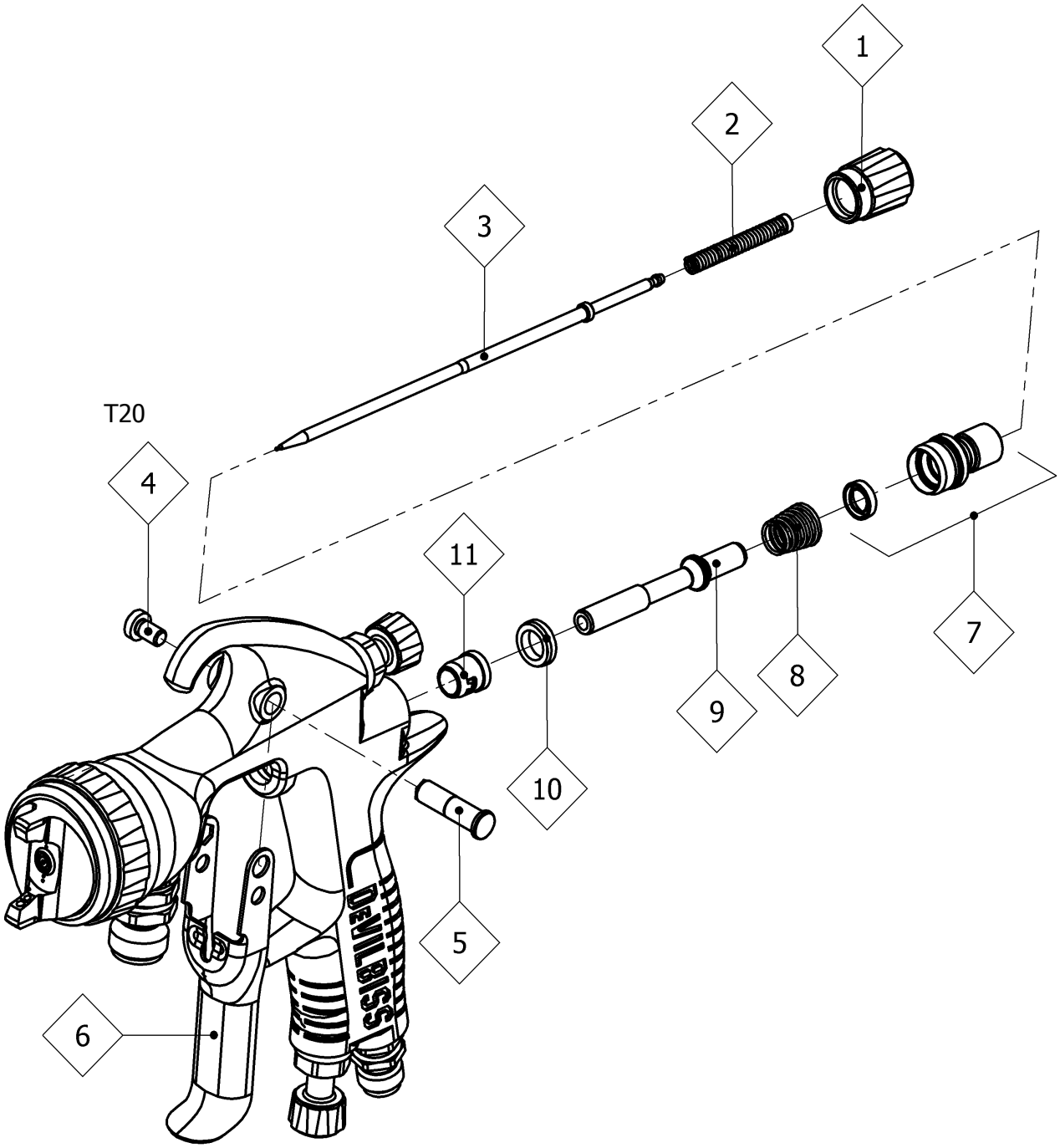

## ASSEMBLY AIR VALVE SEALS

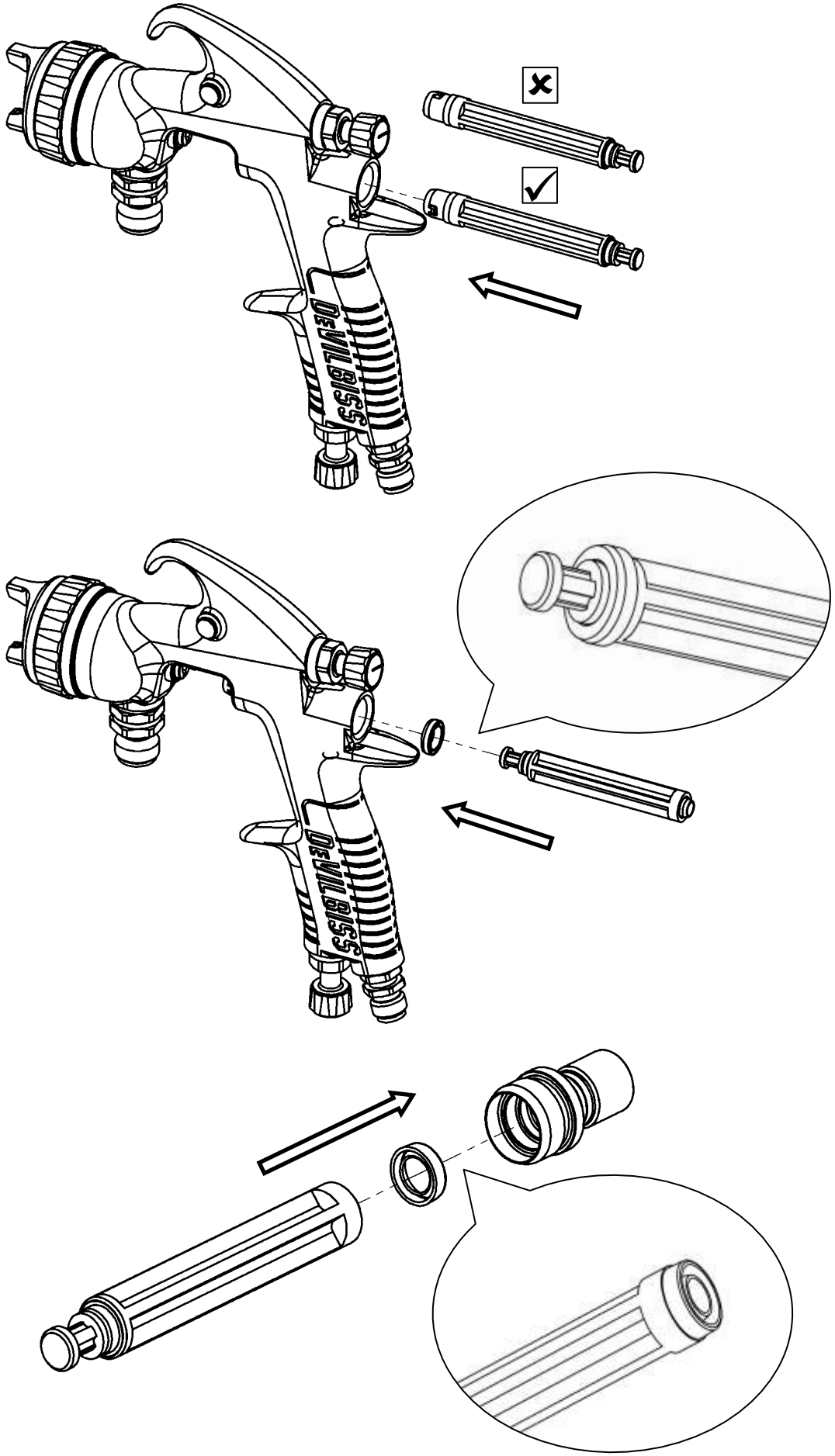

## DISASSEMBLY PACKING

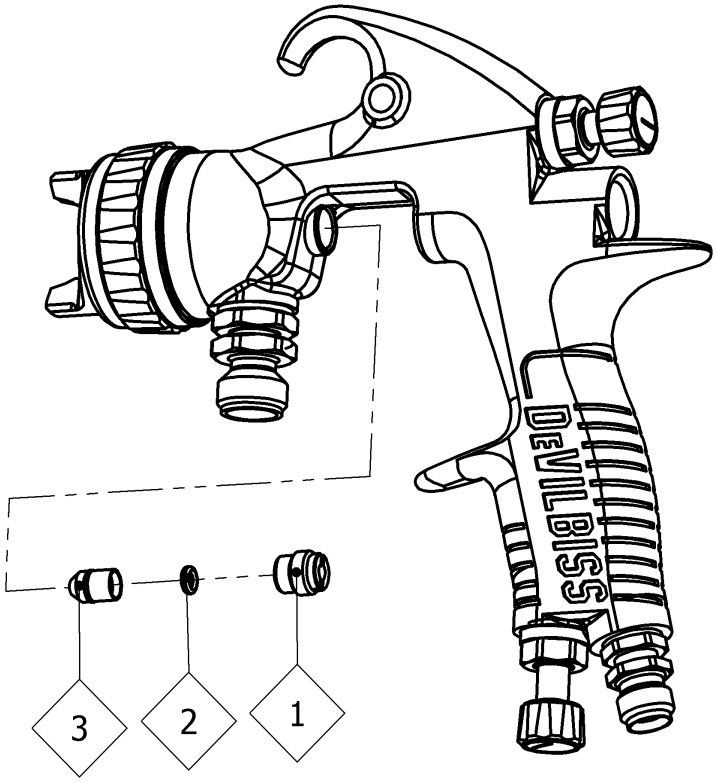


## DISASSEMBLY FLUID INLET

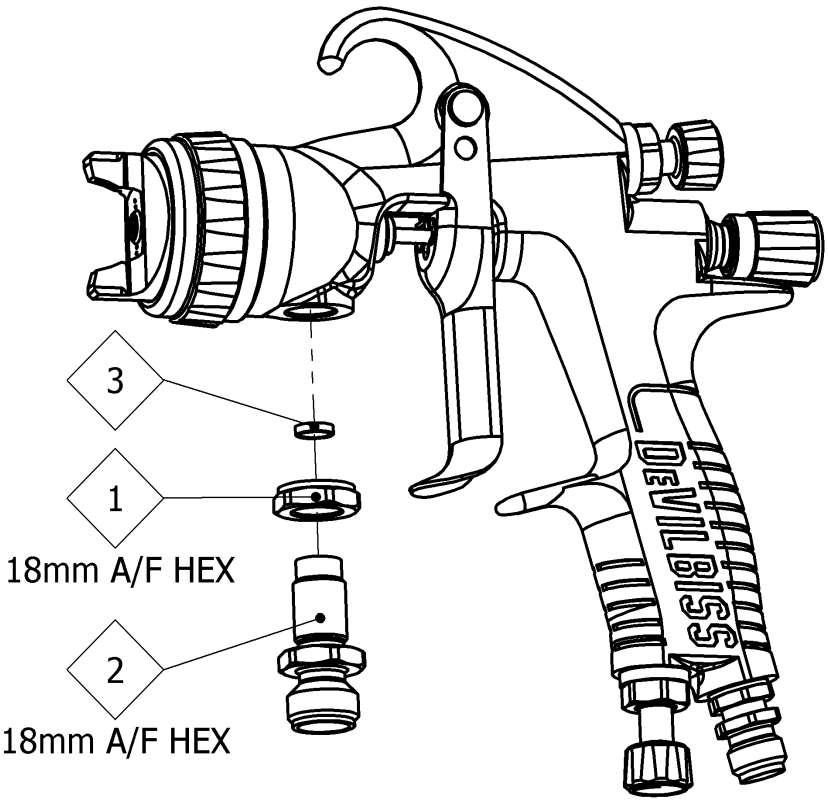

**TROUBLESHOOTING MECHANICAL PERFORMANCE**

| GENERAL FAULTS | CAUSE | CORRECTION |
|---|---|---|
| Will not spray. | No air pressure at gun. | Check air supply and air line. |
| | Fluid needle adjustment knob not open enough. | Open fluid needle adjustment knob. |
| Gun spits paint when triggering on and off. | Incorrect needle fitted to gun. | Check fluid tip/needle selection chart and fit correct item. |
| | Excessive needle wear. | Replace with new needle. |
| | Excessive fluid tip wear. | Replace with new fluid tip. |
| Gun spits paint when triggering on due to paint build-up inside air cap between spraying operations. | Fluid tip not fitted correctly in gun head. | Tighten. |
| | Fluid tip/needle leakage. | Check for damage or blockage. |
| Paint build-up on fluid tip. | Fluid tip not fitted correctly in gun head. | Tighten. |
| | Fluid tip/needle leakage. | Check for damage or blockage. |
| Paint build-up on air cap. | Damaged air cap holes. | Replace with new air cap. |
| | Gradual build-up of bounce-back on gun head. | Thoroughly clean. |
| Unable to get round spray | Fluid tip or sprayhead incorrectly fitted. | Remove, check components for damage and refit correctly. |

| When removing air cap from retaining ring, do not remove the ring seat from the retaining ring. Damage to the parts may occur. Simply wipe parts clean and reassemble with new or clean air cap. | | |
|---|---|---|
| FLUID FAULTS | CAUSE | CORRECTION |
| Slow fluid leak from fluid tip and needle seat. | Fluid tip internal seat scored damaged or worn. | Replace. |
| | Fluid needle external profile damaged or worn. | Replace. |
| | Contamination on needle or tip mating surfaces preventing good seal. | Thoroughy clean. |
| | Incorrect fluid tip for fluid needle fitted to gun. | Check tip/needle selection chart and fit correct item. |
| | Sluggish needle. | Lubricate packing. (GL1) |
| | Tight packing nut. | Adjust. |
| Major fluid leak or fluid jetting from fluid tip and needle seat. | Contamination on needle or tip mating surfaces preventing good seal. | Remove tip and needle and thoroughly clean. |
| | Incorrect fluid tip for fluid needle fitted to gun. | Check tip/needle selection chart and fit correct item. |
| Slow fluid leak from needle packing. | Fluid needle packing worn or loose. | Tighten or replace as necesarry. |

| AIR FAULTS | CAUSE | CORRECTION |
|---|---|---|
| Small air leak from air cap when gun is not triggered. | Spindle contaminated and not correctly seating. | Remove spindle and thoroughly clean valve shaft and seating surfaces. |
| | Spindle seal damaged or missing. | Replace. |

**TROUBLESHOOTING SPRAY PERFORMANCE**

| CONDITION | CAUSE | CORRECTION |
|---|---|---|
| Heavy top or bottom pattern. 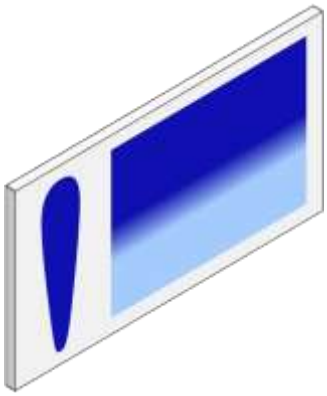 | Material build-up on air cap, plugged horn holes, centre holes or jets. | Soak cap or tip in suitable solvent and thoroughly clean. |
| | Material build-up on fluid tip exterior or partially plugged fluid tip. | Replace fluid tip or air cap if necesarry. |
| | Fluid tip or cap dirty or damaged. | Replace fluid tip or air cap if necesarry. |
| Heavy right or left side pattern. 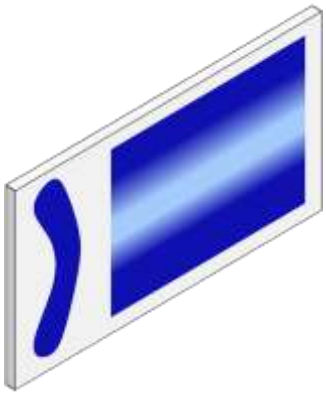 | Left or right side horn holes plugged. | Soak cap or tip in suitable solvent and thoroughly clean. |
| | Dirt or damage on left or right side of fluid tip exterior. | Replace fluid tip or air cap if necesarry. |
| Remedies for the top-heavy, bottom-heavy, right-heavy and left-heavy patterns. | | |
| Determine if the obstruction is on the air cap or the fluid tip. Do this by making a test spray pattern. Then, rotate the cap one-half turn and spray another pattern. If the defect is inverted, obstruction is on the air cap. Clean the air cap as previously instructed. Also check for dried paint just inside the cap centre hole opening, remove by washing with solvent. | | |
| If the defect is not inverted, it is on the fluid tip. Clean tip. If problem persists, renew tip. | | |

| | | |
|---|---|---|
| Heavy centre pattern.<br>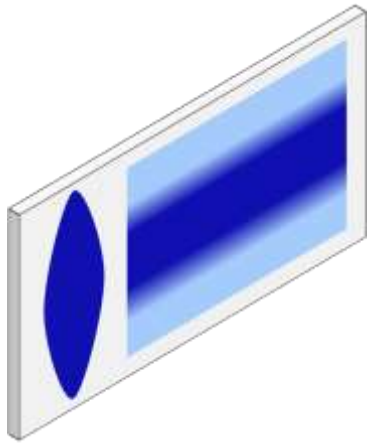 | Pattern adjustment valve set too low. | Turn out counter clockwise to achieve correct pattern. |
| | Too much material. | Reduce fluid flow by turning fluid needle adjusting screw clockwise. Reduce fluid pressure. |
| | Material too thick. | Thin to correct consistency. |
| | Atomising air pressure too low. | Increase air pressure. |
| Intermittent or 'fluttering' spray fan.<br>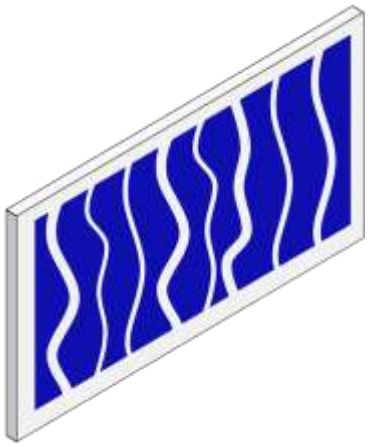 | Loose fluid tip. | Tighten. |
| | Fluid tip not seated correctly in gun head. | Remove fluid tip, clean components, check cone seating on tip and gun for damage or contamination. |
| | Partially obstructed fluid passage or hose. | Clean or replace. |
| Split spray pattern<br>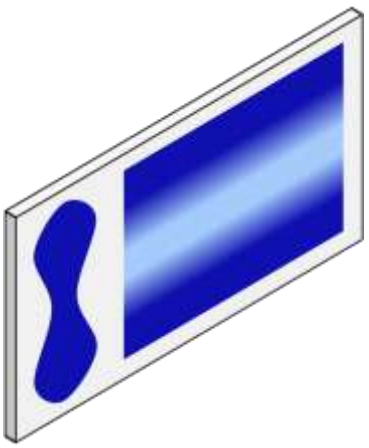 | Not enough material flow. | Increase fluid flow by changing fluid tip size, opening needle control knob or increase fluid pressure on pressure feed container. |
| | Too high horn pressure. | Reduce air pressure by rotating pattern control valve clockwise. |
| | Too much air for fluid quanitity used. | Reduce input air pressure. |

| | | |
|---|---|---|
| Ball end heavy pattern. 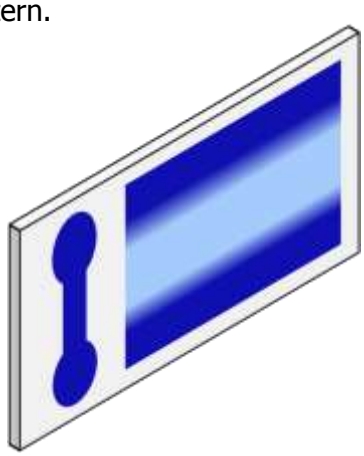 | Too much fluid flow. | Change fluid tip for smaller size or change air cap for different specification air cap. |
| Excessive bounce-back. | Too much atomisation air pressure. | Reduce air pressure. |
| | Gun too far from surface. | Check distance (normally 150-200mm). |
| Runs and sags. | Too much fluid flow. | Adjust gun or reduce fluid pressure. |
| | Material too thin. | Mix properly or apply light coats/reduce fluid flow. |
| | Gun tilted at an angle. | Mount gun at right angle to work. |
| Thin, sandy coarse finish drying before it flows out. | Gun too far from surface. | Check distance. |
| | Too much air pressure. | Reduce air pressure and check spray pattern. |
| | Fluid flow too low. | Increase fluid flow by changing fluid tip size, supply pressure or turning needle control knob counter clockwise. |

## ACCESSORIES

| PART No. | DESCRIPTION | |
|---|---|---|
| DGIPRO-502-BAR | DGI PRO Digital Pressure Gauge. |  |
| SN-406 | Spanner. |  |
| | Torx driver. |  |
| | Cleaning Brush. |  |
| 4900-5-1-K3 | Cleaning Brush (KIT OF 3) |  |
| SPN-8-K2 | Torx Driver (KIT OF 2) |  |
| H-7501HA-7.5 | 7.5m x 8mm (5/16") bore rubber air hose with 1/4" universal fittings. |  |
| H-7504HA-15 | 15m x 10mm (3/8") bore rubber air hose with 3/8" universal fittings. | |
| MPV-463 | QD Fittings (KIT OF 4) |  |
| MPV-60-K3 | MPV Swivels (KIT OF 3) |  |
| GL-1-K10 | Gun Lube Sachets (KIT OF 10) |  |

## DIMENSIONS

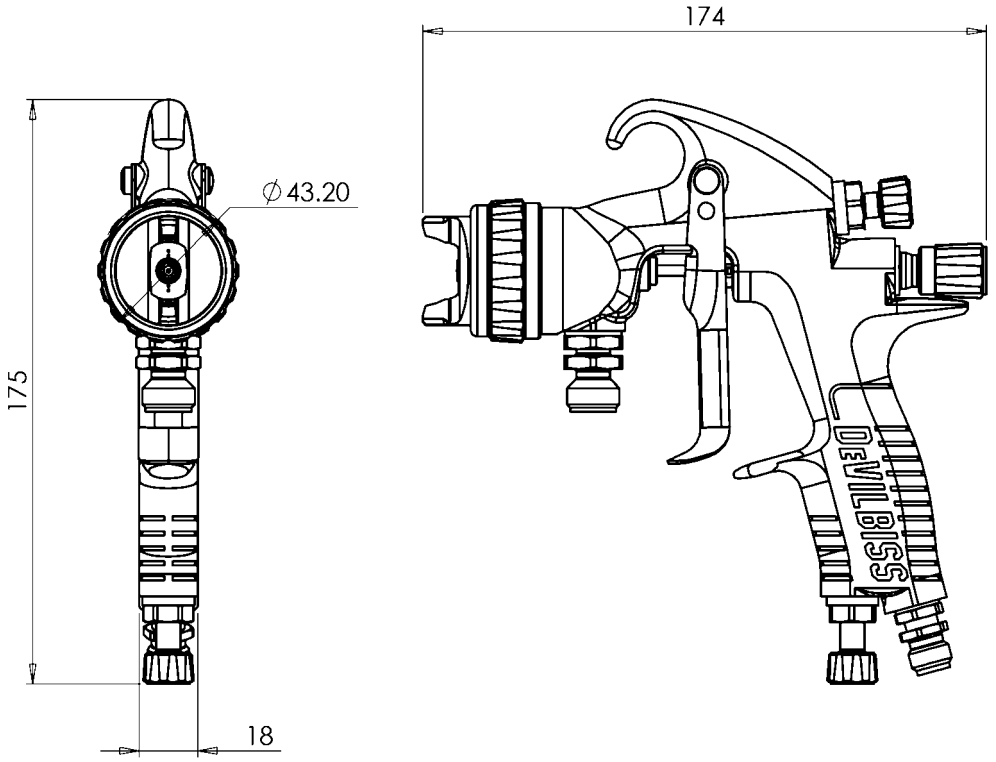

**NOTES**

## WARRANTY POLICY

DeVilbiss products are covered by Finishing Brands one year materials and workmanship limited warranty. The use of any parts or accessories, from a source other than Finishing Brands, will void all warranties. For specific warranty information please contact the closest Finishing Brands location listed below.

Finishing Brands reserves the right to modify equipment specifications without prior notice. DeVilbiss, Ransburg, BGK, and Binks are registered trademarks of Carlisle Fluid Technologies, dba Finishing Brands.

© 2015 Carlisle Fluid Technologies, dba Finishing Brands.
All rights reserved.

DeVilbiss is part of Finishing Brands, a global leader in innovative spray finishing technologies. For technical assistance or to locate an authorised distributor, contact one of our international sales and customer support locations below.

USA/Canada
www.binks.com
info@finishingbrands.com
Toll Free Tel: 1-800-992-4657
Toll Free Fax: 1-888-246-5732

Mexico
www.finishingbrands.com.mx
sales@finishingbrands.com.mx
Tel: 011 52 55 5321 2300
Fax: 011 52 55 5310 4790

Brazil
www.devilbiss.com.br
sales@devilbiss.com.br
Tel: +55 11 5641 2776
Fax: +55 11 5641 1256

United Kingdom
www.finishingbrands.eu
info@finishingbrands.eu
Tel: +44 (0)1202 571 111
Fax: +44 (0)1202 573 488

France
www.finishingbrands.eu
info@finishingbrands.eu
Tel: +33(0)475 75 27 00
Fax: +33(0)475 75 27 59

Germany
www.finishingbrands.eu
info@finishingbrands.eu
Tel: +49 (0) 6074 403 1
Fax: +49 (0) 6074 403 281

China
www.finishingbrands.com.cn
mkt@finishingbrands.com.cn
Tel: +8621-3373 0108
Fax: +8621-3373 0308

Japan
www.ransburg.co.jp
binks-devilbiss@ransburg.co.jp
Tel: 081 45 785 6421
Fax: 081 45 785 6517

Australia
www.finishingbrands.com.au
sales@finishingbrands.com.au
Tel: +61 (0) 2 8525 7555
Fax: +61 (0) 2 8525 7575