PRICE LIST

DeVILBISS®

AUTOMOTIVE REFINISHING

EMEAI

2020

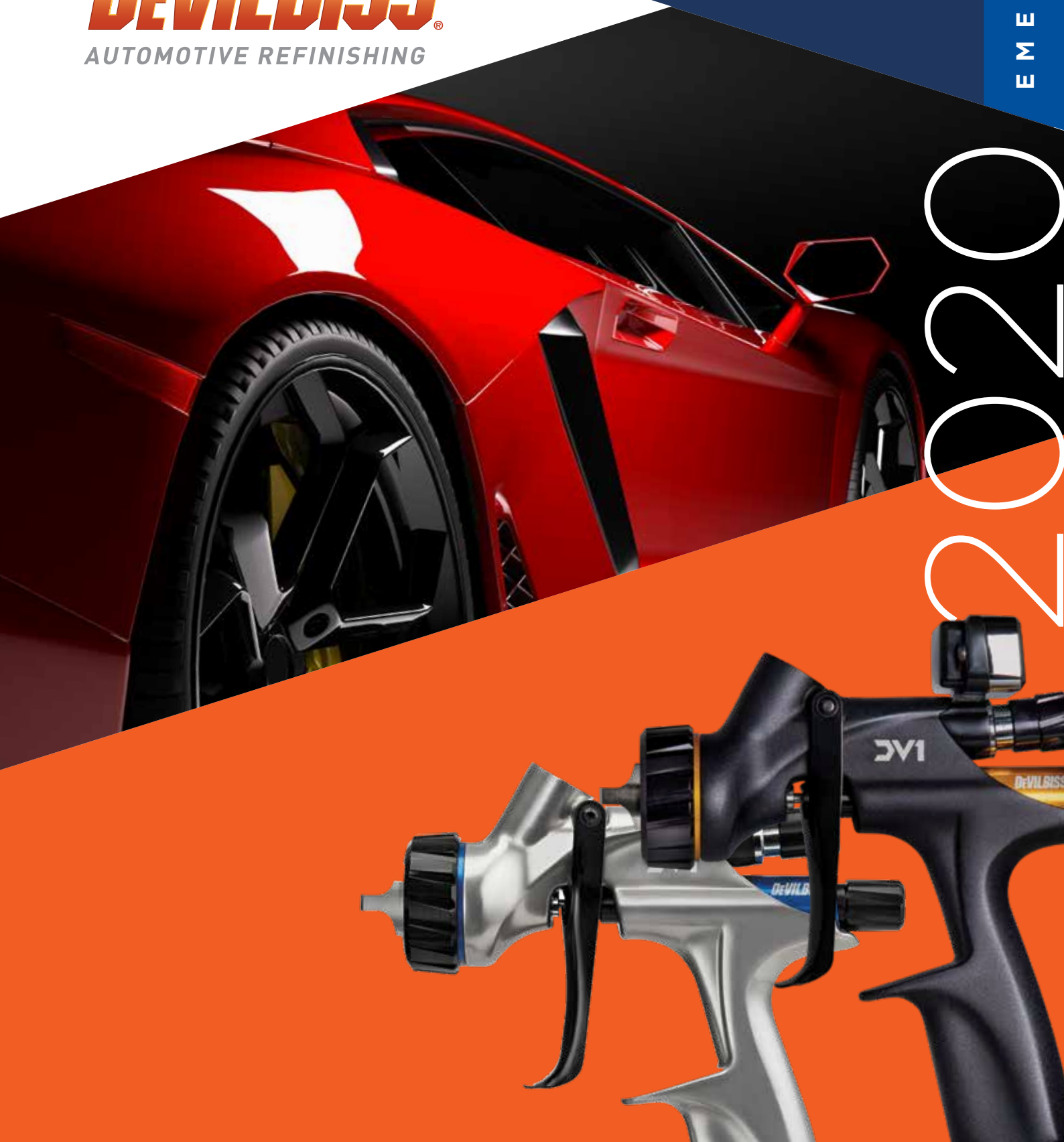

DeVILBISS
AUTOMOTIVE REFINISHING

THE PRO PAINTERS PROCESS GUIDE

DeVILBISS i-system pro

BREATHABLE AIR FILTRATION & CONTROL



- **A** First stage 5 micron filter element. Part No: PROAIR-51
- **B** Second stage 0.01 micron, breathing air filter element. Max oil carryover @ 20°C of 0.01 mg/m3. Part No: PROAIR-52
- **C** Third stage 0.003 micron, breathing air filter element. Max oil carryover @ 20°C of 0.003 mg/m3. Part No: PROAIR-53
- **D** Waist belt, breathing air, odour removal filter cartridge. Part No: PROV-27-K4

Replace filters A, B & C every 6 months, replace filter D every 3 months.

SPRAY TECHNICIAN RESPIRATORY PROTECTION



The DMG Aerodry guns significantly speed up waterborne drying times

i-system SPRAY GUNS & DIGITAL GUGES



RECOMMENDED AIR CAP & FLUID TIP SET-UPS

COMPLIANT COATINGS

PRi Pro LITE PRIMER — FOR PRIMERS/FILLERS/SURFACERS



PR10 Trans-Tech Air Cap - 1.4, 1.6, 1.8, 2.0 or 2.5mm Fluid Tips

FOR WATER/ SOLVENT BASECOAT & CLEARCOAT

GTi Pro LITE

TE10, TE20, T110 High Efficiency or HV30, HV25 HVLP Air Cap
1.2, 1.3 or 1.4mm Fluid Tips



GTi Pro DIGITAL

TE10, TE20, T110 High Efficiency or HV30, HV25 HVLP Air Cap
1.2, 1.3 or 1.4mm Fluid Tips

SRi Pro LITE — FOR SPOT, SMART & PANEL REPAIR



HV5 HVLP or High Efficiency TE5, MC1 and RST Round Spray Air Caps
0.6 (MC1), 0.8, 1.0, 1.2 & 1.4mm Fluid Tips

Index

DV1 Basecoat Gravity Feed Spray Gun ..... 4 - 5
DV1 Clearcoat Gravity Feed Spray Gun ..... 6 - 7
GTi Pro LITE Gravity Feed Spray Guns ..... 8 - 9
GTi Pro Gravity Feed Spray Guns ..... 10 - 11
PRi Pro LITE Gravity Feed Primer Spray Gun ..... 12 - 13
SRi Pro LITE Gravity Feed Spray Gun ..... 14 - 15
GPi Gravity Feed Spray Gun ..... 16 - 17
GFG Pro Conventional Gravity Feed Spray Gun ..... 18 - 19
FLG-5 Gravity and Suction Feed Spray Guns ..... 20 - 21
DAGR Airbrush ..... 22 - 23
GTi Pro Suction and Pressure Feed Spray Guns ..... 24 - 25
GTi Pro LITE Suction and Pressure Feed Spray Guns ..... 26 - 27
JGA Pro Conventional Suction and Pressure Feed Spray Guns ..... 28 - 29
SLG-620 30
SLG-650 31
Pro Clean 32
DMG Air Dryer Guns and Systems 33
DGi Pro Gauge 34
DeKups 35
CLEAN Consumables Range 36
CLEAN Booth Wall Coat & Clear Glass Coat 37
Pro Visor ..... 38 - 39
Valuair and Freedom Half Mask Respirators 40
ProAir-1 Filter Regulator 41
ProAir-2 Filter Regulator Coalescer 42
ProAir-3 Filter Regulator 43
ProAir-4 Filter Regulator 44
Finishline Economy Regulators 45
Paint Cups 46
Hoses 47
Accessories - Hoses and Connections ..... 48 - 49
KBII 2.3 Litre Remote Cup ..... 50 - 51
DX Pumps ..... 52 - 53
MXL Pumps ..... 54 - 55
Binks Pressure Feed Tank ..... 56 - 57
DVFR Filter Regulators 58
Shim Masks 59
GTi Pro (previous version) 60
PRi Pro (previous version) 61
SRi Pro 62
GTi Pro Suction & Pressure (pre 2016) 63
DAGR (pre 2017) 64
CVi 65
GTiW / GTiG / PRi 66
GTiP / GTiS 67
SRi / SRiW 68
VRiS & P / VRiG ..... 69 - 70
JGAS 71
GFG 72
Pro Visor (PROV600 Model) 73
MPV-623 74
MPV-627 Air Fed Half Mask Outfit 75
MPV-616 76
Alphanumeric List ..... 77 - 83
Conditions of Sale ..... 84 - 86
ATEX 87

DV1 Basecoat

by DeVILBISS



HIGH PERFORMANCE PROFESSIONAL SPRAY GUNS

- **The DV1 air caps, with advanced internal geometry, result in a perfectly balanced, consistent spray pattern for a perfect finish.**
- **Reduced air pressure resulting in improved spray pattern control, atomisation consistency and improved transfer efficiency.**
- **A new combined air inlet and air control valve with 12 x higher precision sensitivity for smoother air control.**
- **Consistently achieves a narrow colour window for the closest colour matching.**
- **New advanced fluid tip design reduces turbulence, minimising mottling/clouding.**
- **Less noise for your comfort, especially for the longer project.**

Part Number Explanation

DV1	-	C or U	-	BAR or 000	-	12	-	B or B+
Model		Cupped or Uncupped		Digital or Non Digital		Fluid Tip		Air Cap



DV1-B Plus Air Cap



DV1-B Air Cap

Specification

DV1 B+ 'HVLP Plus' Air Cap	
Air Inlet Pressure	2.0 bar (29 psi)
Air Consumption	300 l/min (10.6 cfm)
Spray Pattern Length	325mm @ 200mm target
Fluid Flow	140 - 190 g/min

DV1 B 'HVLP' Air Cap	
Air Inlet Pressure	2.0 bar (29 psi)
Air Consumption	395 l/min (13.9 cfm)
Spray Pattern Length	330mm @ 200mm target
Fluid Flow	130 - 180 g/min

Air Inlet Thread	1/4" Universal
Cup Capacity	560 mls
Weight (gun only)	470 gms

Air Cap	Plated Brass
Air Cap Retaining Ring	Black Anodised Aluminium
Fluid Tip	Stainless Steel
Fluid Needle	Stainless Steel

DV1 Basecoat Spray Gun Kits

When ordering please specify the air cap of your choice (DV1 B or DV1 B+). Please specify fluid tip you require: 11, 12 or 13).

Part No Examples	Description	Price €
DV1-U-000-11-B	Gun only DV1 Kit with HVLP air cap & 1.1mm tip	**597.40**
DV1-C-000-12-B+	Gun and cup DV1 kit with HVLP 'Plus' air cap & 1.2mm tip	**612.85**
DV1-U-BAR-11-B	Gun only digital DV1 kit with HVLP air cap & 1.1mm tip	**674.65**
DV1-C-BAR-12-B+	Gun & cup digital DV1 kit with HVLP 'Plus' air cap & 1.2mm tip	**690.10**

Kit includes complete gravity feed spray gun, gravity cup (if ordered), paint filter, cleaning brush and maintenance tools.



4900-5-1-K3

Accessories

Part No	Description	Price €
704407	DV1 B HVLP air cap and retaining ring	**97.64**
704408	DV1 B+ HVLP 'Plus' air cap and retaining ring	**97.64**
704411	Fluid tip – size number 11	**71.69**
704412	Fluid tip – size number 12	**71.69**
704413	Fluid tip – size number 13	**71.69**
704416	DV1 fluid needle	**22.25**
704430	Minor service kit	**48.20**
704431	Major service kit	**85.28**
704429	Tool kit	**14.83**
704426	Digital gauge for spreader valve assembly for DV1 – reads in BAR	**184.16**
MPV-60-K3	Pack of 3 male quick detach uni swivel – fits to gun air inlet	**92.29**
HAF-507	Lightweight in-line air filter	**15.45**
4900-5-1-K3	Pack of 3 cleaning brushes	**12.36**
KGP-5-K5	Pack of 5 gravity cup filters for GFC cups	**7.11**



MPV-60-K3



704431

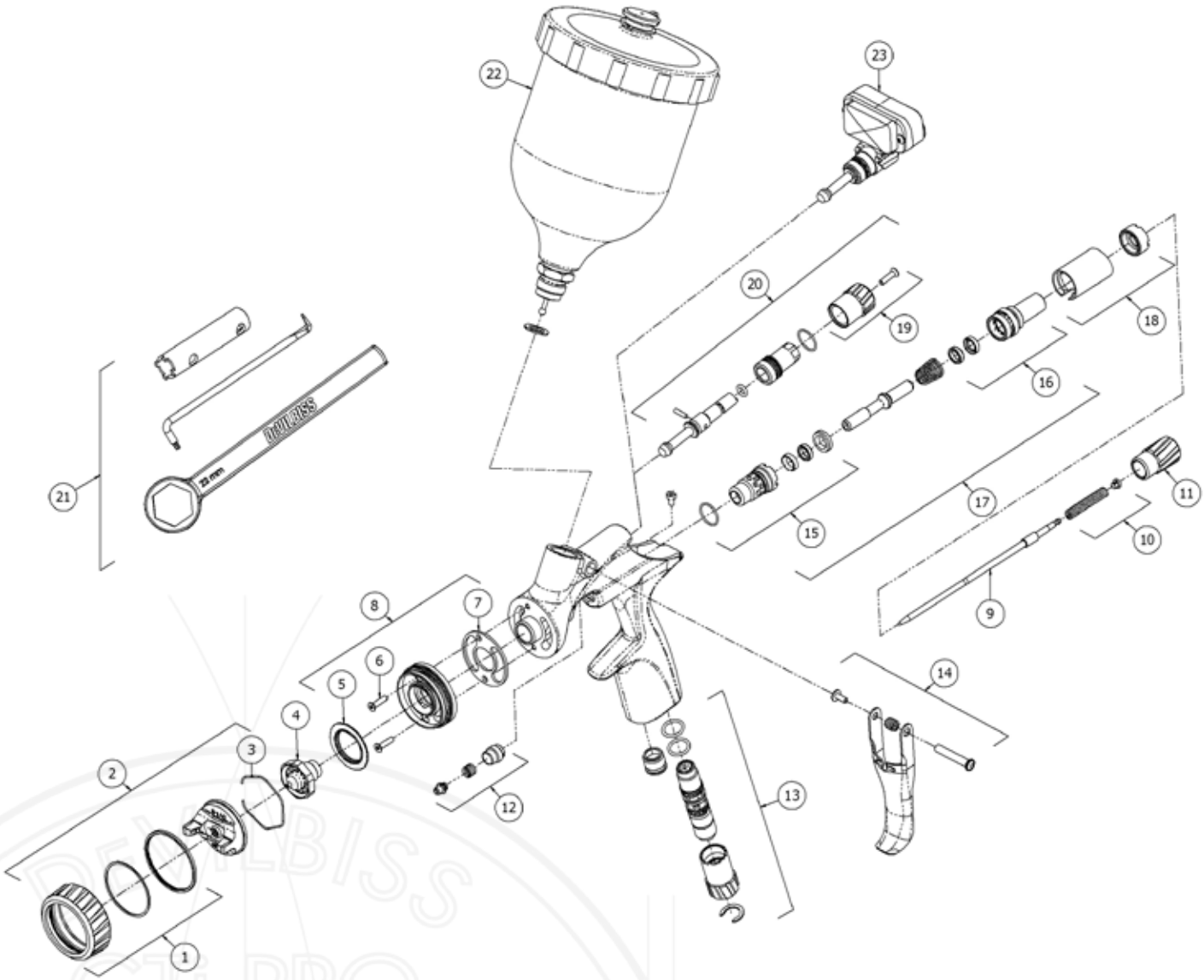

Ref No	Description	Part Number	Price €
1	Retaining ring sub assembly	704425	**30.90**
2	DV1-B HVLP Air Cap	704407	**97.64**
	DV1-B+ HVLP Air Cap	704408	**97.64**
3	Spring clip (kit of 5)	JGA-156-K5	**20.39**
4	Fluid tip 12	704412	**71.69**
	Fluid tip 13	704413	**71.69**
	Fluid tip 14	704414	**71.69**
5	Deflector plate	704402	**4.33**
6+	Spray head screws (kit of 3)	704403	**3.71**
7+	Gasket (kit of 2)	704401	**3.09**
8	Spray head kit	704400	**43.26**
9	Fluid needle	704416	**22.25**
10#+	Needle spring kit	704405	**14.83**
11	Fluid adjusting knob	704404	**12.36**
12+	Packing, spring & packing nut kit	702731	**13.70**
13	Inline flow valve	704417	**55.62**

Ref No	Description	Part Number	Price €
14	Tigger. Stud, spring & screw kit	704406	**24.72**
15#	Front cage assembly	704422	**37.08**
16	Rear seal assembly	704423	**24.72**
17+	Air valve assembly	704424	**67.98**
18	Sleeve kit	704428	**23.48**
19	Spreader knob (non digital)	704419	**11.12**
20	Spreader valve assembly	704418	**37.08**
21	Tool kit	704429	**14.83**
22	Gravity cup (black)	GFC-515	**57.37**
23	Digital pressure gauge	704426	**184.16**
Service Kits			
Minor service kit: Includes items marked # Plus air valve spring, spreader valve pin & o rings		704430	**48.20**
Major service kit: Includes items marked + Plus spreader valve pin & o rings		704431	**85.28**

DV1 Clearcoat

by DeVILBISS



HIGH PERFORMANCE PROFESSIONAL SPRAY GUNS

- **Delivers ultimate clearcoat application performance.**
- **Sprays a uniform pattern that lays the clearcoat flat.**
- **Atomizes effortlessly, producing an even distribution of super-fine particles.**
- **Provides maximum comfort and easy use from set-up through the entire spraying process.**
- **Provides improved transfer efficiency and sprays with less noise.**

Part Number Explanation

DV1 - C or U - BAR or 000 - 1.2 - C1+

Model | Cupped or Uncupped | Digital or Non Digital | Fluid Tip | Air Cap

Specification

DV1 C1+ 'HVLP Plus' Air Cap	
Air Inlet Pressure	2.0 bar (29 psi)
Air Consumption	285 l/min (10.0 cfm)
Spray Pattern Length	325mm @ 200mm target
Fluid Flow	140 - 190 g/min
Air Inlet Thread	1/4" Universal
Cup Capacity	560 mls
Weight (gun only)	470 gms
Air Cap	Plated Brass
Air Cap Retaining Ring	Black Anodised Aluminium
Fluid Tip	Stainless Steel
Fluid Needle	Stainless Steel

DV1 Clearcoat Spray Gun Kits

When ordering please specify the fluid tip you require: 1.0, 1.1, 1.2, 1.3 or 1.4.

Part No Examples	Description	Price €
DV1-U-000-1.1-C1+	Gun only DV1 Kit with HVLP air cap & 1.1mm tip	**580.00**
DV1-C-000-1.2-C1+	Gun and cup DV1 kit with HVLP air cap & 1.2mm tip	**595.00**
DV1-U-BAR-1.1-C1+	Gun only digital DV1 kit with HVLP air cap & 1.1mm tip	**655.00**
DV1-C-BAR-1.2-C1+	Gun & cup digital DV1 kit with HVLP air cap & 1.2mm tip	**670.00**

Kit includes complete gravity cup and paint filter (if ordered) and maintenance tools.



4900-5-1-K3

Accessories

Part No	Description	Price €
704434	DV1 C1+ HVLP air cap and retaining ring	**97.64**
704440	Fluid tip 1.0 mm	**71.69**
704441	Fluid tip 1.1 mm	**71.69**
704442	Fluid tip 1.2 mm	**71.69**
704443	Fluid tip 1.3 mm	**71.69**
704444	Fluid tip 1.4 mm	**71.69**
704416	DV1 fluid needle	**22.25**
704430	Minor service kit	**48.20**
704431	Major service kit	**85.28**
704429	Tool kit	**14.83**
704426	Digital gauge for spreader valve assembly for DV1 – reads in BAR	**184.16**
MPV-60-K3	Pack of 3 male quick detach uni swivel – fits to gun air inlet	**92.29**
HAF-507	Lightweight in-line air filter	**15.45**
4900-5-1-K3	Pack of 3 cleaning brushes	**12.36**
KGP-5-K5	Pack of 5 gravity cup filters for GFC cups	**7.11**



MPV-60-K3



704431

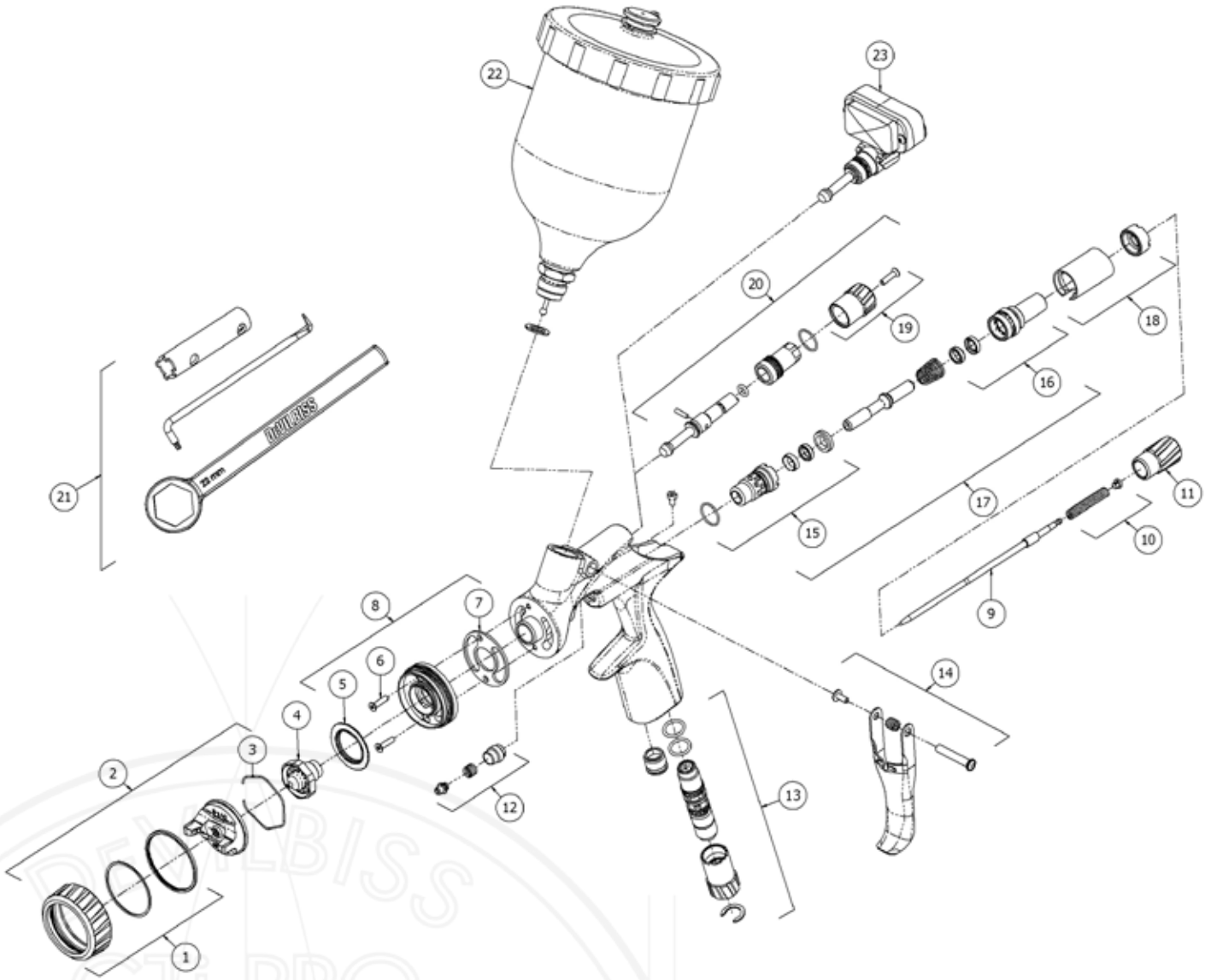

Ref No	Description	Part Number	Price €
1	Retaining ring sub assembly	704425	**30.90**
2	DV1-C1+ HVLP Air Cap	704434	**97.64**
3	Spring clip (kit of 10)	191972	**20.39**
4	Fluid tip 1.0 mm	704440	**71.69**
	Fluid tip 1.1 mm	704441	**71.69**
	Fluid tip 1.2 mm	704442	**71.69**
	Fluid tip 1.3 mm	704443	**71.69**
	Fluid tip 1.4 mm	704444	**71.69**
5	Deflector plate	704402	**4.33**
6+	Spray head screws (kit of 3)	704403	**3.71**
7+	Gasket (kit of 2)	704401	**3.09**
8	Spray head kit	704436	**43.26**
9	Fluid needle	704416	**22.25**
10#+	Needle spring kit	704405	**14.83**
11	Fluid adjusting knob	704404	**12.36**
12+	Packing, spring & packing nut kit	702731	**13.70**

Ref No	Description	Part Number	Price €
13	Inline flow valve	704417	**55.62**
14	Tigger, stud, spring & screw kit	704406	**24.72**
15#	Front cage assembly	704422	**37.08**
16	Rear seal assembly	704423	**24.72**
17+	Air valve assembly	704424	**67.98**
18	Sleeve kit	704437	**POA**
19	Spreader knob (non digital)	704419	**11.12**
20	Spreader valve assembly	704418	**37.08**
21	Tool kit	704429	**14.83**
22	Gravity cup (plastic)	GFC-501	**43.78**
23	Digital pressure gauge	704426	**184.16**
Service Kits			
Minor service kit: Includes items marked # Plus air valve spring, spreader valve pin & o rings		704430	**48.20**
Major service kit: Includes items marked + Plus spreader valve pin & o rings		704431	**85.28**

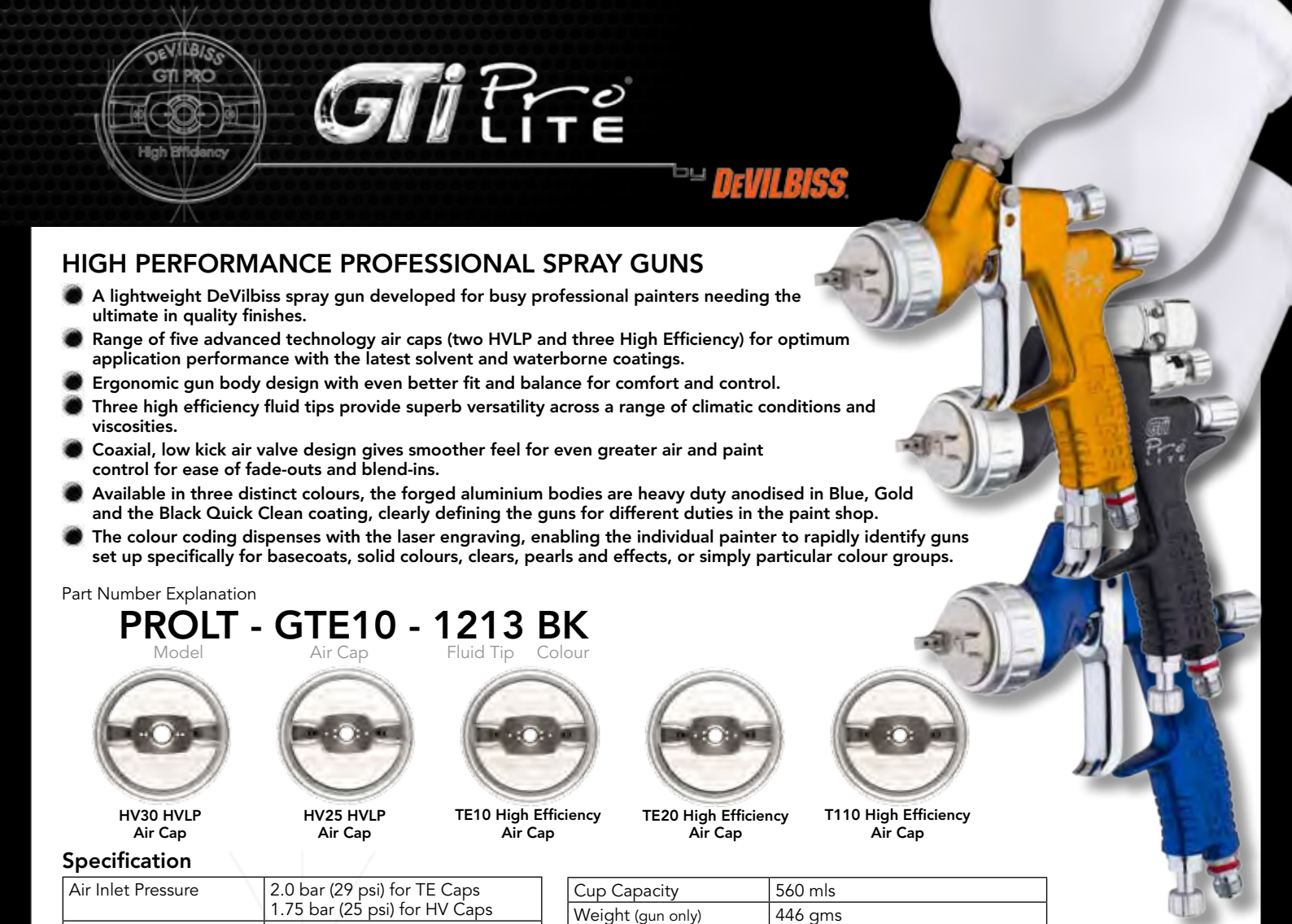

HIGH PERFORMANCE PROFESSIONAL SPRAY GUNS

- **A lightweight DeVilbiss spray gun developed for busy professional painters needing the ultimate in quality finishes.**
- **Range of five advanced technology air caps (two HVLP and three High Efficiency) for optimum application performance with the latest solvent and waterborne coatings.**
- **Ergonomic gun body design with even better fit and balance for comfort and control.**
- **Three high efficiency fluid tips provide superb versatility across a range of climatic conditions and viscosities.**
- **Coaxial, low kick air valve design gives smoother feel for even greater air and paint control for ease of fade-outs and blend-ins.**
- **Available in three distinct colours, the forged aluminium bodies are heavy duty anodised in Blue, Gold and the Black Quick Clean coating, clearly defining the guns for different duties in the paint shop.**
- **The colour coding dispenses with the laser engraving, enabling the individual painter to rapidly identify guns set up specifically for basecoats, solid colours, clears, pearls and effects, or simply particular colour groups.**

Part Number Explanation

PROLT - GTE10 - 1213 BK

Model | Air Cap | Fluid Tip | Colour

HV30 HVLP Air Cap

HV25 HVLP Air Cap

TE10 High Efficiency Air Cap

TE20 High Efficiency Air Cap

T110 High Efficiency Air Cap

Specification

Air Inlet Pressure	2.0 bar (29 psi) for TE Caps 1.75 bar (25 psi) for HV Caps
Air Consumption	TE10: 270 l/min (9.5 cfm) TE20: 360 l/min (12.7 cfm) HV30: 460 l/min (16.3 cfm) HV25: 350 l/min (12.4 cfm) T110: 265 l/min (9.4 cfm)
Air Inlet Thread	1/4" Universal

Cup Capacity	560 mls
Weight (gun only)	446 gms
Weight (gun & cup)	629 gms
Air Cap	Plated Brass
Air Cap Retaining Ring	Clear Anodised Aluminium
Fluid Tip	Stainless Steel
Fluid Needle	Stainless Steel

GTi Pro LITE Spray Gun Kits

When ordering please specify the air cap of your choice (HV30, HV25, TE10, TE20, T110). All guns are built complete with 13 fluid tip, please specify which spare fluid tip you require: 1213 for 12 or 1314 for 14. Also specify colour required: BK = 'Quick Clean' Black / BU = Blue / GD = Gold.

Part No Examples	Description	Price €
PROLT-GTE10-1213BK	GTI Pro Lite in black with TE10 High Efficiency air cap #13 fluid tip with spare #12 fluid tip	**565.47**
PROLT-GHV30-1314GD	GTI Pro Lite in gold with HV30 HVLP air cap #13 fluid tip with spare #14 fluid tip	**565.47**
PROLT-GHV30-1314BU	GTI Pro Lite in blue with HV30 HVLP air cap #13 fluid tip with spare #14 fluid tip	**565.47**
PROLT-DT110-1213BK	GTI Pro Lite in black with T110 HVLP air cap #12 fluid tip with spare #14 fluid tip and a DGI Digital Gauge. (Not available on the gold model)	**643.75**

Kits include spare 12 or 14 fluid tip dependent on set up ordered, complete gravity feed spray gun, cup, paint filter, cleaning brush, pack of identification rings, gun spanner and Torx & flat back screwdriver.

Accessories

Part No	Description	Price €
PRO-102-HV30-K	HV30 HVLP Air Cap and retaining ring	**123.60**
PRO-102-HV25-K	HV25 HVLP Air Cap and retaining ring	**123.60**
PRO-102-TE10-K	TE10 High Efficiency Air Cap and retaining ring	**123.60**
PRO-102-TE20-K	TE20 High Efficiency Air Cap and retaining ring	**123.60**
PRO-102-T110-K	T110 High Efficiency Air Cap and retaining ring	**123.60**
PROL-455-****-**	Air cap, fluid tip and needle kit	**POA**
PRO-200-**-K	Fluid Tip - Size Numbers 11, 12, 13 & 14	**POA**
PRO-301-K	Pro LITE Fluid Needle	**36.77**
PRO-470	Spray Gun Service/Repair Kit	**33.99**
SN-406	Gun wrench, Torx & flat back screwdriver, cleaning brush and colour ID rings	**19.36**
DGIPRO-504-BAR-K	Digital gauge for spreader valve assembly for GTi Pro LITE - reads in bars	**202.91**
MPV-60-K3	Pack of three male quick detach uni swivel - fits to gun air inlet	**92.29**
HAF-507	Lightweight in-line air filter	**15.45**
4900-5-1-K3	Pack of three cleaning brushes	**12.36**
KGP-5-K5	Pack of 5 gravity cup filters for GFC cups	**7.11**



KGP-5-K5



4900-5-1-K3



MPV-60-K3



HAF-507



PRO-470

**** = Air Cap
** = Fluid tip size

PROL-455-****-**	Air cap, fluid tip and needle kit (Part 7, 2 & 4)	POA

Kit Part No.	Air Cap	Fluid Tip
PROL-455-	HV25	
	HV30	12
	TE10	13
	TE20	14
	T110	

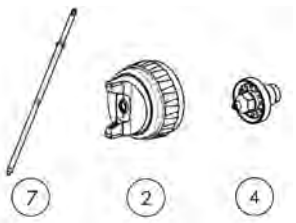

PRO-470 Repair Kit includes:	€33.99
Packing, Spring & Packing Nut	SN-404
Trigger Stud & Screw*	
Spray Head Seal	SN-18-1
Seal and Pin Kit	GTI-428-K5
Needle Spring	PRO-472
*Not sold separately	

Ref No	Description	Part Number	Price €
1	Air Cap Retaining Clip	JGA-156-K5	**20.39**
2	TE10 High Efficiency Air Cap & Ring	PRO-102-TE10-K	**123.60**
	TE20 High Efficiency Air Cap & Ring	PRO-102-TE20-K	**123.60**
	HV30 HVLP Air Cap & Ring	PRO-102-HV30-K	**123.60**
	HV25 HVLP Air Cap & Ring	PRO-102-HV25-K	**123.60**
	T110 High Efficiency Air Cap & Ring	PRO-102-T110-K	**123.60**
3	Air Cap Retaining Ring & Seals	PRO-420-K	**44.50**
4	Fluid Tip 11, 12, 13 or 14	PRO-200-**-K	**POA**
5	Spray Head Seal (kit of 2)	SN-18-1-K2	**5.67**
6	Spray Head & Seal Kit	SN-69-K	**44.50**
7	Fluid Needle	PRO-301-K	**36.77**
8	Fluid Adjusting Knob	SN-67-C-K	**11.54**
9	Spreader Valve Assembly	PRO-406-K	**39.76**
10	Packing, Spring & Packing Nut Kit	SN-404-K	**14.32**
11	Needle Spring Kit	PRO-472-K3	**12.98**

Ref No	Description	Part Number	Price €
12	Trigger, Stud & Screw Kit	SP-617-CR-K	**35.43**
13	Air Inlet	SN-9-K	**19.36**
14	Colour ID Ring Kit (4 Colours)	SN-26-K4	**2.78**
15	Airflow Valve (Cheater)	PRO-407-K	**57.37**
16	Air Valve Kit	PRO-471	**73.75**
17	Body Housing	SN-66-K	**18.33**
18	Gravity Cup Kit	GFC-501	**43.78**
19	Drip Check Lid (kit of 5)	GFC-2-K5	**4.43**
20	Gravity Cup Lid	GFC-402	**3.40**
21	Filter	KGP-5-K5	**7.11**
22	Torx Key & Spanner	SN-406	**19.36**
23	Torx Key	SPN-8-K2	**9.89**
24	Baffle Plate	SN-41-K	**7.62**

HIGH PERFORMANCE PROFESSIONAL SPRAY GUNS

- **Five advanced technology air caps (two HVLP and three High Efficiency) for optimum application performance with the latest solvent and waterborne coatings.**
- **Ergonomic gun body design with even better fit and balance for comfort and control.**
- **Ultra high flow fluid tips provide superb versatility across a range of viscosities.**
- **Revolutionary air valve design gives smoother feel for even greater air and paint control for ease of fade-outs and blend-ins.**
- **Available in three distinct colours, the forged aluminium bodies are heavy duty anodised in Blue, Gold and the Black Quick Clean coating, clearly defining the guns for different duties in the paint shop.**
- **The colour coding dispenses with the laser engraving enabling the individual painter to rapidly identify guns set up specifically for basecoats, solid colours, clears, pearls and effects or simply particular colour groups.**



Part Number Explanation

PROGTI - GTE10 - 1213 BK

Model Air Cap Fluid Tip Colour



HV30 HVLP Air Cap



HV25 HVLP Air Cap



TE10 High Efficiency Air Cap



TE20 High Efficiency Air Cap



T110 High Efficiency Air Cap

Specification

Air Inlet Pressure	2.0 bar (29 psi) for TE Caps 1.75 bar (25 psi) for HV Caps
Air Consumption	TE10: 270 l/min (9.5 cfm) TE20: 360 l/min (12.7 cfm) HV30: 460 l/min (16.3 cfm) HV25: 350 l/min (12.4 cfm) T110: 265 l/min (9.4 cfm)

Air Inlet Thread	1/4" Universal
Cup Capacity	560 mls
Weight (gun & cup)	681 gms
Air Cap	Plated Brass
Air Cap Retaining Ring	Clear Anodised Aluminium
Fluid Tip	Stainless Steel
Fluid Needle	Stainless Steel

GTi Pro Spray Gun Kits

When ordering please specify the air cap of your choice (HV30, HV25, TE10, TE20, T110). All guns are built complete with 13 fluid tip, please specify which spare fluid tip you require: 1213 for 12 or 1314 for 14. Also specify colour required: BK = 'Quick Clean' Black / BU = Blue / GD = Gold.

Part No Examples	Description	Price €
PROGTI-GTE10-1213BK	GTI Pro in black with TE10 High Efficiency air cap #13 fluid tip with spare #12 fluid tip	**565.47**
PROGTI-GHV30-1314GD	GTI Pro in gold with HV30 HVLP air cap #13 fluid tip with spare #14 fluid tip	**565.47**
PROGTI-GHV30-1314BU	GTI Pro in blue with HV30 HVLP air cap #13 fluid tip with spare #14 fluid tip	**565.47**
PROGTI-DT110-1314BU	GTI Pro in blue with T110 HVLP air cap #13 fluid tip with spare #14 fluid tip and a DGI Digital Gauge. (Not available on the gold model)	**643.75**

Kits include spare 12 or 14 fluid tip dependent on set up ordered, complete gravity feed spray gun, cup, paint filter, cleaning brush, pack of identification rings, gun spanner and Torx & flat back screwdriver.

Accessories

Part No	Description	Price €
PRO-102-HV30-K	HV30 HVLP Air Cap and retaining ring	**123.60**
PRO-102-HV25-K	HV25 HVLP Air Cap and retaining ring	**123.60**
PRO-102-TE10-K	TE10 High Efficiency Air Cap and retaining ring	**123.60**
PRO-102-TE20-K	TE20 High Efficiency Air Cap and retaining ring	**123.60**
PRO-102-T110-K	T110 High Efficiency Air Cap and retaining ring	**123.60**
PROGTI-455-***-**	Air cap, fluid tip and needle kit	**POA**
PRO-200-**-K	Fluid Tip - Size Numbers 12, 13 & 14	**POA**
PRO-300-K	Fluid Needle	**36.77**
PRO-415-1	Spray Gun Service/Repair Kit	**33.99**
SN-406	Gun wrench, Torx & flat back screwdriver, cleaning brush and colour ID rings	**19.36**
DGIPRO-504-BAR-K	Digital gauge for spreader valve assembly for GTi Pro - reads in bars	**202.91**
MPV-60-K3	Male Quick Detach Uni Swivel - fits to gun air inlet	**92.29**
HAF-507	Lightweight in-line air filter	**15.45**
4900-5-1-K3	Pack of three cleaning brushes	**12.36**
KGP-5-K5	Pack of 5 gravity cup filters for GFC cups	**7.11**
PRO-15-K3	ProClip - snap on trigger locking clip	**10.61**



MPV-60-K3



HAF-507



PRO-415-1

*** = Air Cap
** = Fluid tip size

Please note that these parts only fit the current coloured gun models, please see page 60 for information on the original pre-2016 model.

PROGTI-455-****-**	Air cap, fluid tip and needle kit (Part 8, 2 & 4)	POA

Kit Part No.	Air Cap	Fluid Tip
PROL-455-	HV25	
	HV30	12
	TE10	13
	TE20	14
	T110	

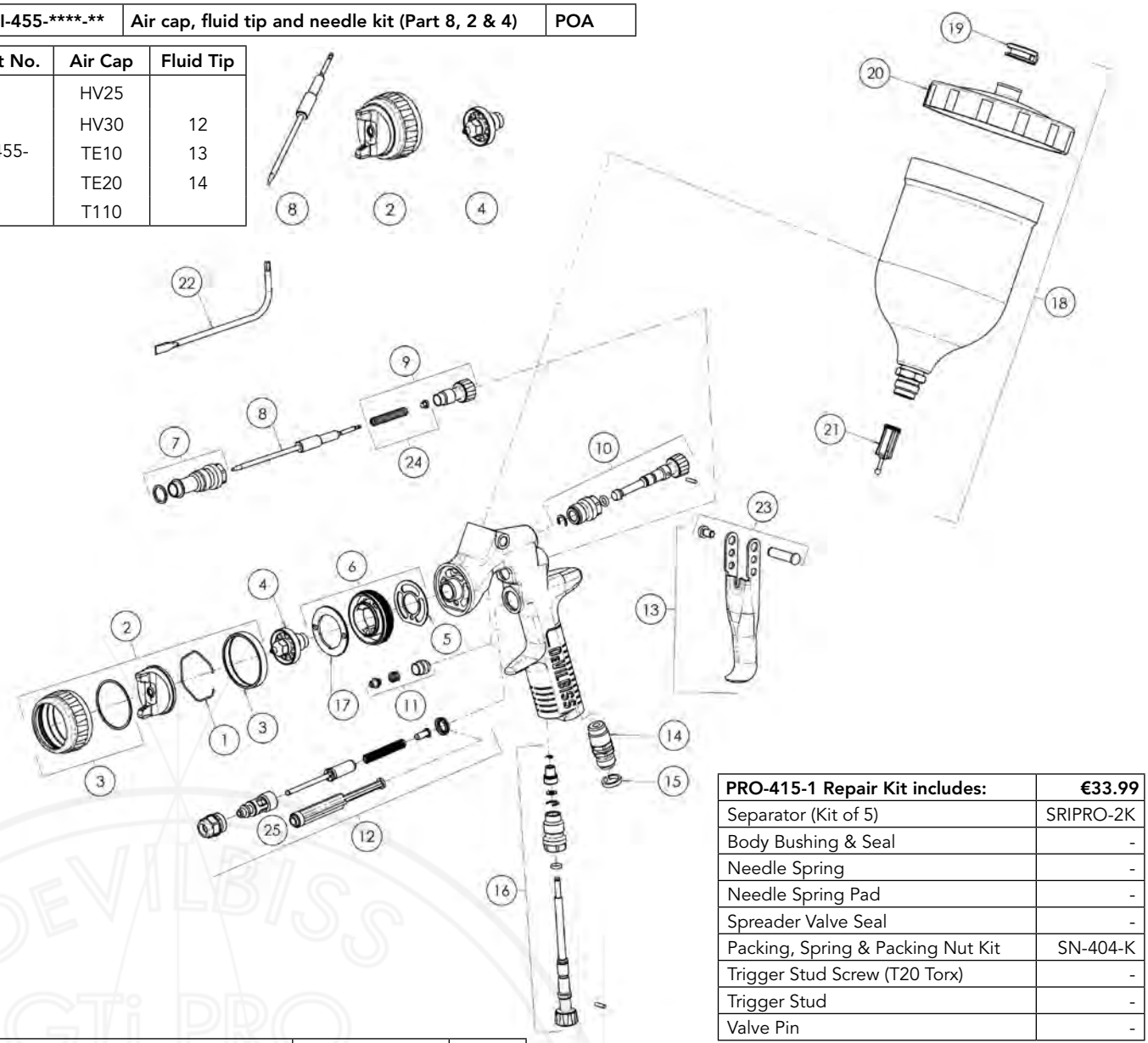

PRO-415-1 Repair Kit includes:	€33.99
Separator (Kit of 5)	SRIPRO-2K
Body Bushing & Seal	-
Needle Spring	-
Needle Spring Pad	-
Spreader Valve Seal	-
Packing, Spring & Packing Nut Kit	SN-404-K
Trigger Stud Screw (T20 Torx)	-
Trigger Stud	-
Valve Pin	-

Ref No	Description	Part Number	Price €
1	Air Cap Retaining Clip	JGA-156-K5	**20.39**
2	TE10 High Efficiency Air Cap & Ring	PRO-102-TE10-K	**123.60**
	TE20 High Efficiency Air Cap & Ring	PRO-102-TE20-K	**123.60**
	HV30 HVLP Air Cap & Ring	PRO-102-HV30-K	**123.60**
	HV25 HVLP Air Cap & Ring	PRO-102-HV25-K	**123.60**
	T110 High Efficiency Air Cap & Ring	PRO-102-T110-K	**123.60**
3	Air Cap Retaining Ring & Seals	PRO-420-K	**44.50**
4	Fluid Tip – 12, 13, 14	PRO-200-**-K	**POA**
5	Spray Head Seal (kit of 2)	SN-18-1-K2	**5.67**
6	Spray Head & Seal Kit	SN-69-K	**44.50**
7	Body Bushing & Seal	SN-6-K	**40.07**
8	Fluid Needle	PRO-300-K	**36.77**
9	Fluid Adjusting Knob, Spring & Pad Kit	PRO-5-K	**31.00**
10	Spreader Valve Assembly	PRO-406-K	**39.76**
11	Packing, Spring & Packing Nut Kit	SN-404-K	**14.32**

Ref No	Description	Part Number	Price €
12	Air Valve Replacement Kit	SN-402-K	**87.24**
13	Trigger, Stud & Screw Kit	SN-21-K	**35.43**
14	Air Inlet	SN-9-K	**19.36**
15	Colour ID Ring Kit (4 Colours)	SN-26-K4	**2.78**
16	Airflow Valve	PRO-407-K	**57.37**
17	Baffle plate	SN-41-K	**7.62**
18	Gravity Cup Kit	GFC-501	**43.78**
19	Drip Check Lid (kit of 5)	GFC-2-K5	**4.43**
20	Gravity Cup Lid	GFC-402	**3.40**
21	Filter	KGP-5-K5	**7.11**
22	Torx Key	SPN-8-K2	**9.89**
23	Trigger Stud & Torx Screw (kit of 5)	SN-405-K5	**66.95**
24	Needle spring and pad kit	SN-4-K3	**18.75**
25	Air valve seal & service tool	SN-34-K5	**21.53**

HIGH PERFORMANCE, GRAVITY FEED, PRIMER SPRAY GUN

- **Advanced technology PR10 High Efficiency Air Cap.**
- **Suitable for all primers including latest generation waterbase materials.**
- **Fluid Tip sizes available for fillers, surfacers and polyesters.**
- **First class atomisation and material distribution.**
- **Utilises new design air valve for smooth triggering control.**
- **Ergonomic gun body with improved "fit and feel".**
- **Large spray patterns for fast and easy application.**
- **Drop forged body with tough anodised finish for protection.**
- **Also available, UV set-up for new generation UV primers.**



Part Number Explanation

PRILT - GPR10 - XX

Model Air Cap Fluid Tip

Specification

Air Inlet Pressure	2.0 bar (29 psi)
Air Consumption	300 l/min (10.6 cfm)
Air Inlet Thread	1/4" Universal
Cup Capacity	560 mls
Weight (gun & cup)	760 gms
Air Cap	Plated Brass
Air Cap Retaining Ring	Clear Anodised Aluminium
Fluid Tip	Stainless Steel
Fluid Needle	Stainless Steel

No PR10 High Efficiency Air Cap

PRi Pro LITE Spray Gun Kits

Part No	Description	Price €
PRILT-GPR10-14	Gravity Gun & Cup – PR10 Air Cap & No. 14 Fluid Tip	**409.94**
PRILT-GPR10-16	Gravity Gun & Cup – PR10 Air Cap & No. 16 Fluid Tip	**409.94**
PRILT-GPR10-18	Gravity Gun & Cup – PR10 Air Cap & No. 18 Fluid Tip	**409.94**
PRILT-GPR10-20	Gravity Gun & Cup – PR10 Air Cap & No. 20 Fluid Tip	**409.94**
PRILT-GPR10-25	Gravity Gun & Cup – PR10 Air Cap & No. 25 Fluid Tip	**409.94**

Kit includes PRi Pro LITE Gravity Gun, cup, paint filter, brush and multi-fit spanner

PRi Pro LITE UV Spray Gun Kits

Part No	Description	Price €
PRILT-GPR10-UV1	Gravity Gun & Cup – PR10 Air Cap & No. 1 UV Fluid Tip	**409.94**
PRILT-GPR10-UV2	Gravity Gun & Cup – PR10 Air Cap & No. 2 UV Fluid Tip	**409.94**

Accessories

Part No	Description	Price €
PRIPRO-102-PR10-K	Air cap and retaining ring	**123.60**
PRIPRO-220-**-K	Fluid Tip - Size Numbers 14,16,18, 20 & 25	**POA**
PRIPRO-219-UV*-K	UV Fluid Tip - Size Numbers 1 & 2	**POA**
PRIPRO-320-K	Fluid needle	**36.77**
PRIPRO-319-K	UV Fluid needle	**36.77**
PRO-470	Spray gun repair kit – includes seals, packing and springs	**33.99**
PRO-46-K3	Protective Cap	**22.66**
HAF-507	Lightweight, in-line air filter	**15.45**
KGP-5-K5	Pack of gravity cup filters for GFC cups	**7.11**
GFC-501	Replacement gravity cup complete (0.6 litre)	**43.78**
GFC-515	UV gravity cup	**57.37**
4900-5-1-K3	Pack of three cleaning brushes	**12.36**
MPV-60-K3	Male quick detach Uni swivel stem to fit onto gun air inlet	**92.29**
GFV-50-F	Gravity gun bench top stand	**55.93**
GFG-6	Wall mounting bracket for gun and cup	**11.43**

** = Fluid tip size



PRO-46-K3



KGP-5-K5



GFV-50-F



MPV-60-K

PRILT-450-****-**	Air cap, fluid tip and needle kit (Part 7, 2 & 4)	POA

Kit Part No.	Air Cap	Fluid Tip
PRILT-450-	PR10	14 16 18 20 25

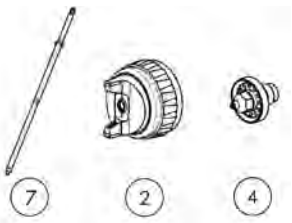

PRO-470 Repair Kit includes:	€33.99
Packing, Spring & Packing Nut	SN-404
Trigger Stud & Screw*	
Spray Head Seal	SN-18-1
Seal and Pin Kit	GTI-428-K5
Needle Spring	PRO-472
*Not sold separately	

Ref No	Description	Part Number	Price €
1	Air Cap Retaining Clip	JGA-156-K5	**20.39**
2	High Efficiency Air Cap	PRIPRO-102-PR10-K	**123.60**
3	Air Cap Retaining Ring & Seals	PRO-420-K	**44.50**
4	Fluid Tip 14,16, 18, 20, 25	PRIPRO-220-**-K	**POA**
	UV Fluid Tip 1 & 2	PRIPRO-219-UV*-K	**POA**
5	Spray Head Seal (kit of 2)	SN-18-1-K2	**5.67**
6	Spray Head & Seal Kit	SN-69-K	**44.50**
7	Fluid Needle	PRIPRO-320-K	**36.77**
	UV Fluid Needle	PRIPRO-319-K	**36.77**
8	Fluid Adjusting Knob, Spring & Pad Kit	SN-67-C-K	**11.54**
9	Spreader Valve Assembly	PRO-406-K	**39.76**
10	Packing, Spring & Packing Nut Kit	SN-404-K	**14.32**
11	Needle Spring Kit	PRO-472-K3	**12.98**
12	Trigger, Stud & Screw Kit	SP-617-CR-K	**35.43**

Ref No	Description	Part Number	Price €
13	Air Inlet	SN-9-K	**19.36**
14	Colour ID Ring Kit (4 Colours)	SN-26-K4	**2.78**
15	Airflow Valve (Cheater)	PRO-407-K	**57.37**
16	Air Valve Kit	PRO-471	**73.75**
17	Body Housing	SN-66-K	**18.33**
18	Gravity Cup Kit	GFC-501	**43.78**
	Black UV Gravity Cup Kit	GFC-515	**57.37**
19	Drip Check Lid (kit of 5)	GFC-2-K5	**4.43**
20	Gravity Cup Lid	GFC-402	**3.40**
21	Filter	KGP-5-K5	**7.11**
22	Torx Key & Spanner	SN-406	**19.36**
23	Torx Key	SPN-8-K2	**9.89**

SRi Pro® LITE by DeVILBISS

HIGH PERFORMANCE SMART / SPOT REPAIR GRAVITY FEED SPRAY GUN



- **SRI Pro LITE has lighter trigger control allowing for greater control for micro repairs.**
- **Lightweight for improved handling.**
- **Ergonomic gun body with improved fit, feel, comfort and control.**
- **Balanced air valve design for precision control of paint and air.**
- **Different air cap choices to suit all latest refinishing materials.**
- **A range of tip sizes for varying viscosities and control preferences.**
- **Renowned DeVilbiss atomisation quality and even paint distribution.**

Part Number Explanation

SRIPROL	-	**TE5**	-	**08**
SRIPROL	-	**MC1**	-	**06**
Model		Air Cap		Fluid Tip

Specification

Air Consumption:	HV5: 135 l/min (4.8 cfm) @ 2.0 bar (30 psi)
	TE5: 100 l/min (3.5 cfm) @ 2.0 bar (30 psi)
	RS1: 55 l/min (1.9 cfm) @ 1.0 bar (15 psi)
	MC1: 50 l/min (1.8 cfm) @ 1.0 bar (15 psi)
Air inlet thread	1/4" Universal
Cup Capacity	125 mls
Weight (gun & cup)	455 gms
Air Cap	Plated Brass
Air Cap Retaining Ring	Clear Anodised Aluminium
Fluid Tip	Stainless Steel
Needle	Stainless Steel

No TE5 High Efficiency Air Cap



No HV5 HVLP Air Cap



No MC1 High Efficiency Air Cap

SRi Pro LITE Gravity Spot Repair Spray Gun Kits (Specify the air cap & tip size required)

Part No	Description	Price €
SRIPROL-TE5-08	Gravity Feed Gun with TE5 High Efficiency air cap & No. 08 fluid tip	**404.79**
SRIPROL-HV5-10	Gravity Feed Gun with HV5 HVLP air cap & size No. 10 fluid tip	**404.79**
SRIPROL-MC1-06	Gravity Feed Gun with MICRO air cap & size No. 06 fluid tip	**404.79**

The kit contains: a spray gun with chosen cap tip set up, gravity cup, pouring funnel, spanner, torx key and cleaning brush.



SRIPRO-102-RS1-K

Accessories

Part No	Description	Price €
SRIPRO-102-HV5-K	HVLP Air Cap and retaining ring	**93.73**
SRIPRO-102-TE5-K	High-Efficiency Air Cap and retaining ring	**93.73**
SRIPRO-102-MC1-K	High-Efficiency Micro Air Cap and retaining ring	**93.73**
SRIPRO-102-RS1-K	Round spray (hornless) cap - priming, pinstriping	**93.73**
SRIPRO-200-**-K	Fluid Tip - Sizes No. 08, No. 10, No. 12 & No. 14	**POA**
SRIPRO-210-06M-K	Fluid Tip - Micro only	**67.88**
SRIPRO-300-08-10-K	Fluid Needle for No. 08 & No. 10 fluid tip	**31.31**
SRIPRO-300-12-14-K	Fluid Needle for No. 12 & No. 14 fluid tip	**31.31**
SRIPRO-310-06M-K	Fluid Needle - Micro only	**31.31**
SPN-8-K2	Torx & flat blade Screwdriver - Trigger & Needle Packing	**9.89**
MPV-60-K3	Male Quick Detach Uni Swivel - fits to gun air inlet	**92.29**
SRI-65-K2	Pack of two cleaning brushes	**9.06**
PRO-415-1	SRi service kit – includes seals, packing and springs	**33.99**
SRI-510	125ml Acetal gravity cup	**43.78**
SRI-51-K12	Pack of 12 SRi cup pouring funnels	**19.36**
HAV-501-B	In-Line Air Adjusting Valve	**58.71**



SPN-8-K2 & SRi-50-K2



MPV-60-K3

SRIPROL-450-****-**	Air cap, fluid tip and needle kit (Part 4, 1 & 2)	POA

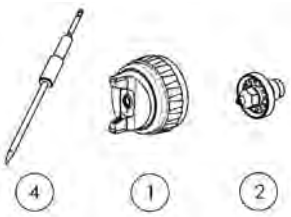

Kit Part No.	Air Cap	Fluid Tip
SRIPROL-450-	MC1	06
	HV5	08
	TE5	10
		12

PRO-415-1 Repair Kit includes:	€33.99
Separator (Kit of 5)	SRIPRO-2K
Body Bushing & Seal	-
Needle Spring	-
Needle Spring Pad	-
Spreader Valve Seal	-
Packing, Spring & Packing Nut Kit	SN-404-K
Trigger Stud Screw (T20 Torx)	-
Trigger Stud	-
Valve Pin	-

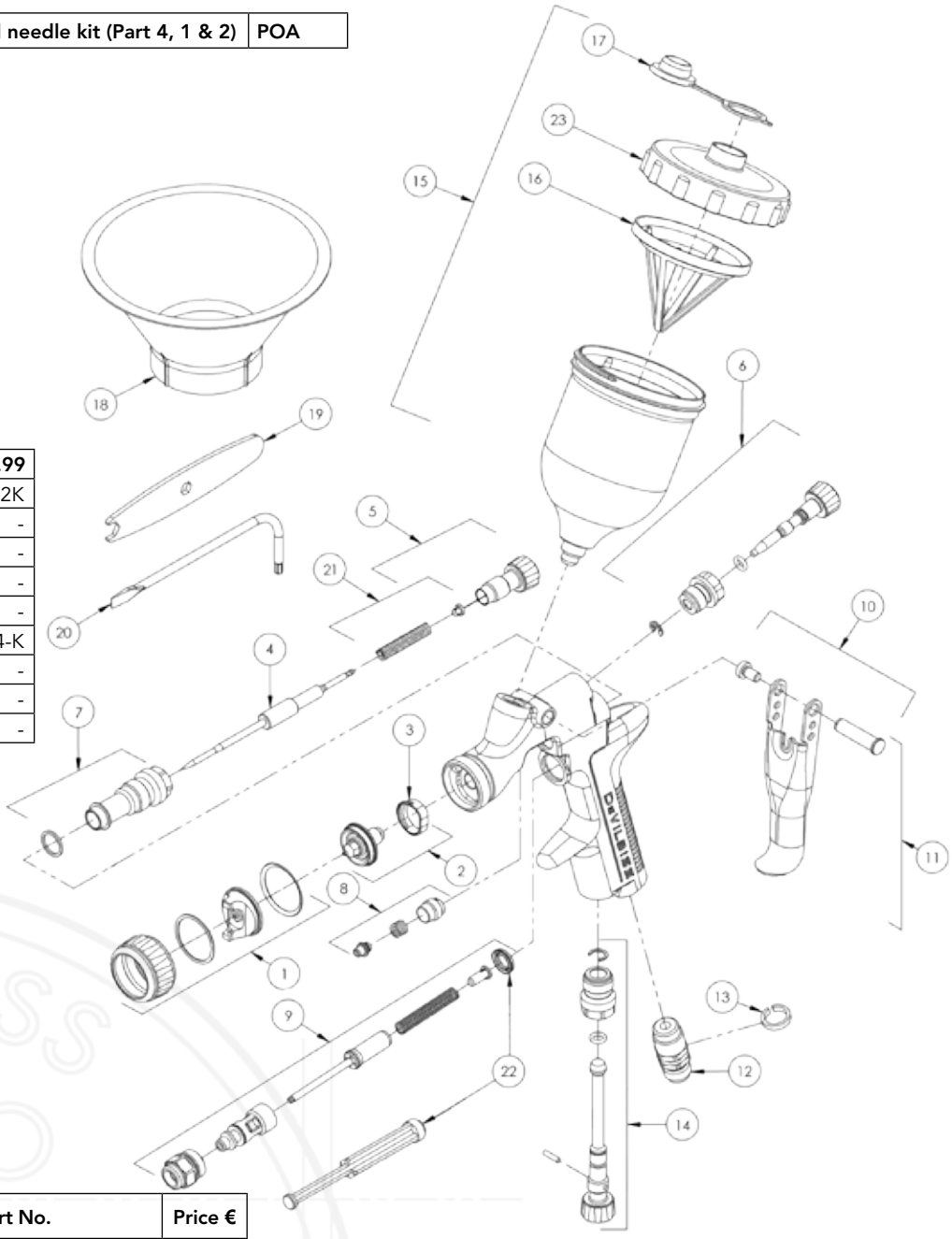

Ref. No	Description	Part No.	Price €
1	HVLP Air Cap & Ring	SRIPRO-102-HV5-K	**93.73**
	High Efficiency Air Cap & Ring	SRIPRO-102-TE5-K	**93.73**
	Round Spray Air Cap & Ring	SRIPRO-102-RS1-K	**93.73**
	High Efficiency Micro Air Cap & Ring	SRIPRO-102-MC1-K	**93.73**
2	Fluid Tip (** = 08, 10, 12 or 14)	SRIPRO-200-**-K	**POA**
	Fluid Tip (Micro only)	SRIPRO-210-06M-K	**67.88**
3	Separator	SRIPRO-2-K5	**11.12**
4	Fluid Needle for No. 08 & No. 10 Fluid Tips	SRIPRO-300-08-10-K	**31.31**
	Fluid Needle for No. 12 & No. 14 Fluid Tips	SRIPRO-300-12-14-K	**31.31**
	Fluid Needle (Micro Only)	SRIPRO-310-06M-K	**31.31**
5	Fluid Adjusting Knob	SN-81-K	**29.15**
6	Spreader Valve Assembly	SRIPRO-402-K	**26.57**
7	Body Bushing & Seal	SN-6-K	**40.07**
8	Packing, Spring & Packing Nut Kit	SN-404-K	**14.32**
9	Air Valve Assembly	SN-402-K	**87.24**

Ref. No	Description	Part No.	Price €
10	Stud and Screw kit	SN-405-K5	**66.95**
11	Trigger, Stud & Screw Kit	SN-42-K	**18.03**
12	Air Inlet	SN-40-K	**14.52**
13	Colour ID Ring Kit (4 Colours)	SN-26-K4	**2.78**
14	Airflow Valve	PRO-408-K	**39.76**
15	Gravity Cup Kit	SRI-510	**43.78**
16	Filter	SRI-42-K3	**20.81**
17	Drip Check Lid (kit of 5)	GFC-2-K5	**4.43**
18	Funnel kit of 12	SRI-51-K12	**19.36**
19	Spanner kit of 2	SRI-50-K2	**12.67**
20	Torx Key	SPN-8-K2	**9.89**
21	Needle spring and pad kit	SN-423-K3	**21.73**
22	Air valve seal & service tool	SN-34-K5	**21.53**
23	Gravity Cup Lid	SRI-414-K2	**15.55**

GENERAL PURPOSE SPRAY GUN

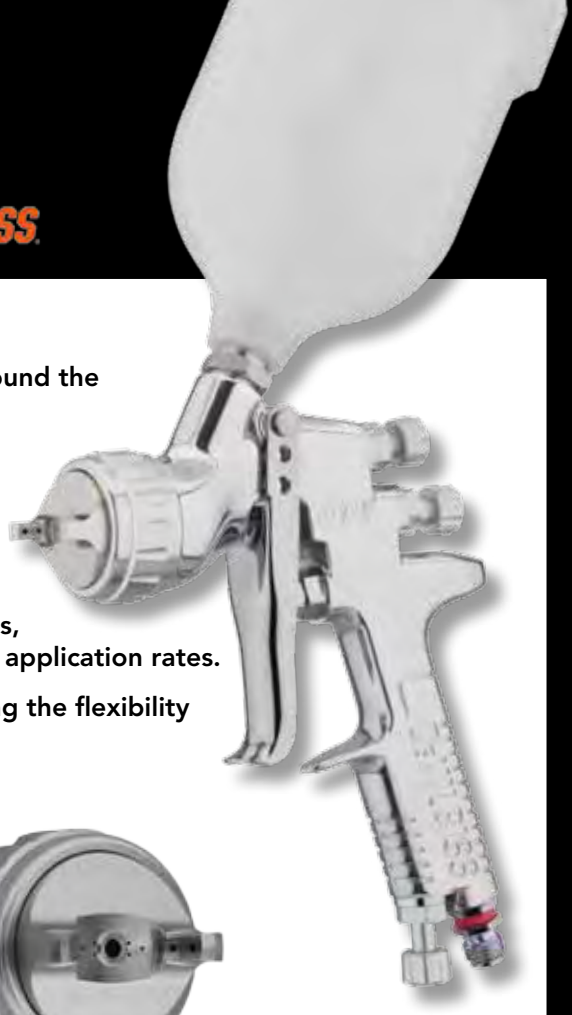

- **Cost-effective i-system spray gun, for General Purpose applications around the bodyshop.**
- **Featuring the latest GTi Pro forged aluminium gun body with lightweight aluminium controls, for that legendary fit and feel synonymous with DeVilbiss ergonomics.**
- **Fitted with the GP1 High Efficiency air cap for perfect atomisation.**
- **Ideal for a wide range of materials including enamels, synthetics, primers, 2 pack commercial paints as well as materials that demand high or fast application rates.**
- **Available with a choice of 1.4mm, 1.6mm or 1.8mm fluid tips, providing the flexibility required for General Purpose duty.**

Part Number Explanation

GPi - GP1 - 18

Model | Air Cap | Fluid Tip

No GP1
High Efficiency Air Cap

Specification

Air Inlet Pressure	2.0 bar (29 psi)
Air Consumption	270 l/min (9.5cfm)
Air Inlet Thread	1/4" Universal
Fluid Flow	1.4 - 100-180 ml/min
	1.6 - 180-280 ml/min
	1.8 - 200-350 ml/min
Pattern	280-320 mm
Cup Capacity	560 mls
Weight (gun & cup)	683 gms
Air Cap	Plated Brass
Air Cap Retaining Ring	Clear Anodised Aluminium
Fluid Tip	Stainless Steel
Fluid Needle	Stainless Steel

GPi Spray Gun Kits

Part No	Description	Price €
GPI-GP1-14	Gravity gun & cup kit – GP1 air cap & 1.4mm fluid tip	**298.70**
GPI-GP1-16	Gravity gun & cup kit – GP1 air cap & 1.6mm fluid tip	**298.70**
GPI-GP1-18	Gravity gun & cup kit – GP1 air cap & 1.8mm fluid tip	**298.70**

Accessories

Part No	Description	Price €
PRO-102-GP1-K	Air Cap	**123.60**
PROC-215-**-K	Fluid Tip 14, 16, 18	**POA**
PRO-306-**-**-K	Fluid Needle	**POA**
PRO-415-1	Spray Gun Service/Repair Kit	**33.99**
SN-406	Gun wrench, Torx & flat back screwdriver, cleaning brush and colour ID rings	**19.36**
HAV-501-B	In-Line Air Adjusting Valve	**58.71**
MPV-60-K3	Male Quick Detach Uni Swivel - fits to gun air inlet	**92.29**
HAF-507	Lightweight in-line air filter	**15.45**
4900-5-1-K3	Pack of three cleaning brushes	**12.36**
KGP-5-K5	Pack of 5 gravity cup filters for GFC cups	**7.11**
PRO-15-K3	ProClip - snap on trigger locking clip	**10.61**
GFV-50-F	Gravity Gun Stands	**55.93**

** = Fluid tip size



HAV-501-B



KGP-5-K5



GFV-50-F



MPV-60-K3

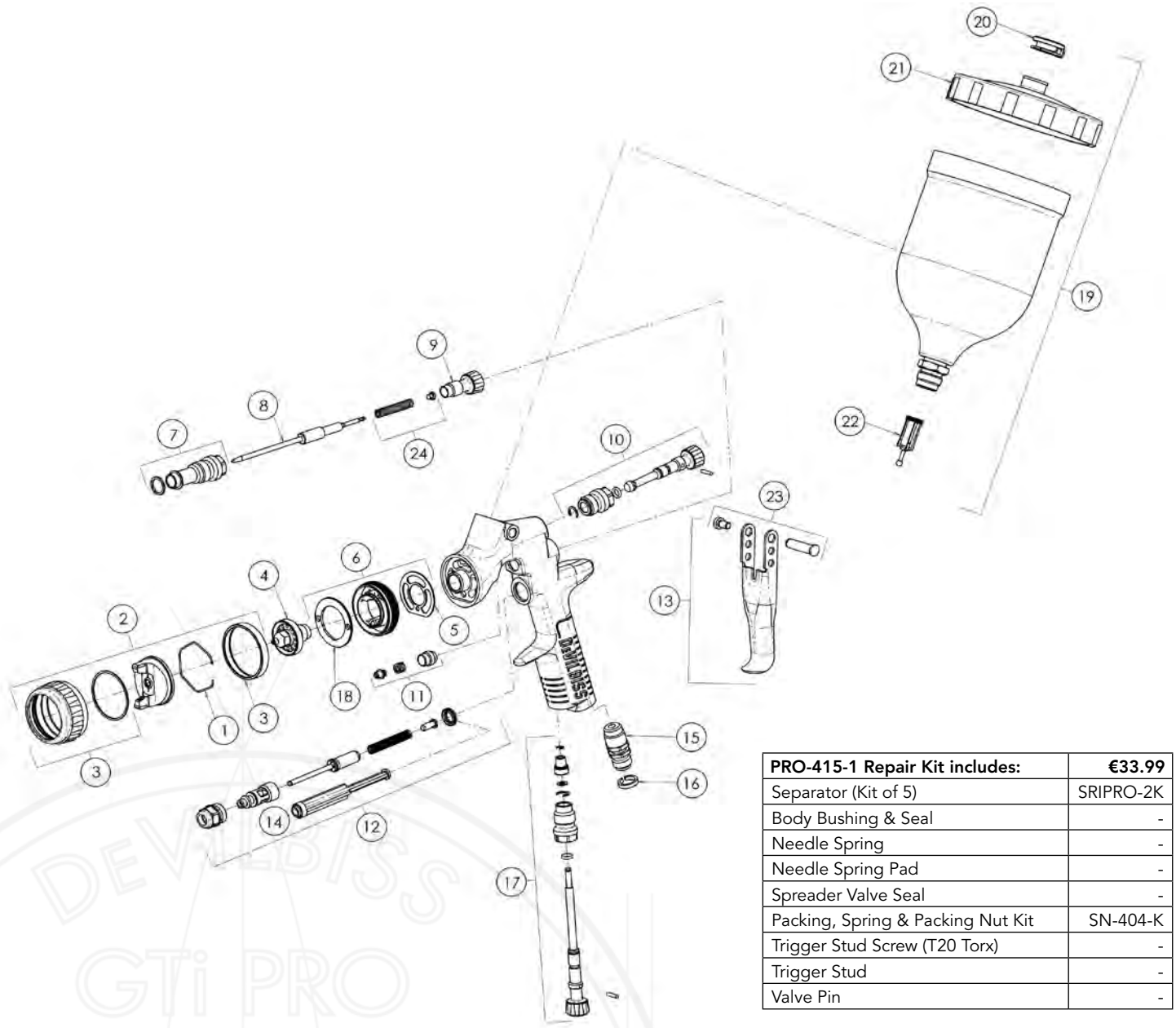

PRO-415-1 Repair Kit includes:	€33.99
Separator (Kit of 5)	SRIPRO-2K
Body Bushing & Seal	-
Needle Spring	-
Needle Spring Pad	-
Spreader Valve Seal	-
Packing, Spring & Packing Nut Kit	SN-404-K
Trigger Stud Screw (T20 Torx)	-
Trigger Stud	-
Valve Pin	-

Ref No	Description	Part Number	Price €
1	Air Cap Retaining Clip	JGA-156-K5	**20.39**
2	Air Cap	PRO-102-GP1-K	**123.60**
3	Air Cap Retaining Ring & Seals	PRO-405-K	**51.29**
4	Fluid Tip – 14, 16, 18	PROC-215-**-K	**POA**
5	Spray Head Seal (kit of 2)	SN-18-1-K2	**5.67**
6	Spray Head & Seal Kit	SN-17-1-K	**44.50**
7	Body Bushing & Seal	SN-6-K	**40.07**
8	Fluid Needle for No. 14 Fluid Tips	PRO-306-12-14-K	**36.77**
	Fluid Needle for No. 16 & No. 18 Fluid Tips	PRO-306-16-18-K	**36.77**
9	Fluid Adjusting Knob	PRO-3-K	**31.00**
10	Spreader Valve Assembly	PRO-406-K	**39.76**
11	Packing, Spring & Packing Nut Kit	SN-404-K	**14.32**
12	Air Valve Replacement Kit	SN-402-K	**87.24**

Ref No	Description	Part Number	Price €
13	Trigger, Stud & Screw Kit	SN-21-K	**35.43**
14	Air Valve Seal & Service Tool	SN-34-K5	**21.53**
15	Air Inlet	SN-40-K	**14.52**
16	Colour ID Ring Kit (4 Colours)	SN-26-K4	**2.78**
17	Airflow Valve	PRO-407-K	**57.37**
18	Baffle plate	SN-41-K	**7.62**
19	Gravity Cup Kit	GFC-501	**43.78**
20	Drip Check Lid (kit of 5)	GFC-2-K5	**4.43**
21	Gravity Cup Lid	GFC-402	**3.40**
22	Filter	KGP-5-K5	**7.11**
23	Trigger Stud & Torx Screw (kit of 5)	SN-405-K5	**66.95**
24	Needle spring and pad kit	SN-4-K3	**18.75**
25	Air valve seal & service tool	SN-34-K5	**21.53**

PROFESSIONAL CONVENTIONAL GRAVITY FEED SPRAY GUN



- **Totally redesigned GFG gun for professional use.**
- **Renowned DeVilbiss atomisation quality and even paint distribution.**
- **Air valve design for ultra smooth triggering and control.**
- **Rugged drop forged body with anodised finish for protection.**
- **A choice of two advanced technology air caps to suit solids and metallics.**
- **Three fluid tip sizes for varying viscosities and control preferences.**
- **Ergonomic gun body with improved fit, feel, comfort and control.**
- **Faster, easier maintenance from user-friendly fittings and adjustments.**

Part Number Explanation

GFGPRO - C1 - XX

Model | Air Cap | Fluid Tip



No C1 Air Cap



No C2 Air Cap

Specification

Air Inlet Pressure	C1: 2.5 - 3.0 bar (30 - 45 psi) C2: 2.5 - 4.0 bar (30 - 60 psi)
Air Consumption	C1: 300 l/min (10.6 cfm) @ 3.0 bar C2: 305 l/min (12.8 cfm) @ 3.0 bar
Air Inlet Thread	1/4" Universal

Cup Capacity	560 mls
Weight (gun & cup)	768 gms
Air Cap & Ring	Plated Brass
Fluid Tip	Stainless Steel
Fluid Needle	Stainless Steel

GFG Pro Spray Gun Kits

When ordering please specify the air cap of your choice (C1 or C2) and the tip size of your choice (14, 16 or 18).

Part No Examples	Description	Price €
GFGPRO-C1-14	Gravity Gun & Cup - C1 air cap and No. 14 fluid tip	**510.88**
GFGPRO-C1-16	Gravity Gun & Cup - C1 air cap and No. 16 fluid tip	**510.88**
GFGPRO-C2-18	Gravity Gun & Cup - C2 air cap and No. 18 fluid tip	**510.88**

Kit includes GFG PRO Gravity gun, cup, paint filter, brush and multi-fit spanner

Accessories

Part No	Description	Price €
PROC-120-C1-K	C1 Air Cap and retaining ring	**123.60**
PROC-120-C2-K	C2 Air Cap and retaining ring	**123.60**
PROC-220-**-K	Fluid Tip - Size Numbers 14, 16 & 18	**POA**
GFGPRO-320-K	Fluid Needle	**36.77**
PRO-415-1	Spray Gun Service/Repair Kit	**33.99**
SPN-8-K2	Torx & flat blade Screwdriver - Trigger & Needle Packing	**9.89**
SN-406	Gun wrench, Torx & flat back screwdriver, cleaning brush and colour ID rings	**19.36**
MPV-60-K3	Male Quick Detach Uni Swivel - fits to gun air inlet	**92.29**
HAF-507	Lightweight in-line air filter	**15.45**
4900-5-1-K3	Pack of three cleaning brushes	**12.36**
KGP-5-K5	Pack of 5 gravity cup filters for GFC cups	**7.11**
PRO-15-K3	ProClip - snap on trigger locking clip	**10.61**



MPV-60-K3



HAF-507



PRO-415-1

** = Fluid tip size

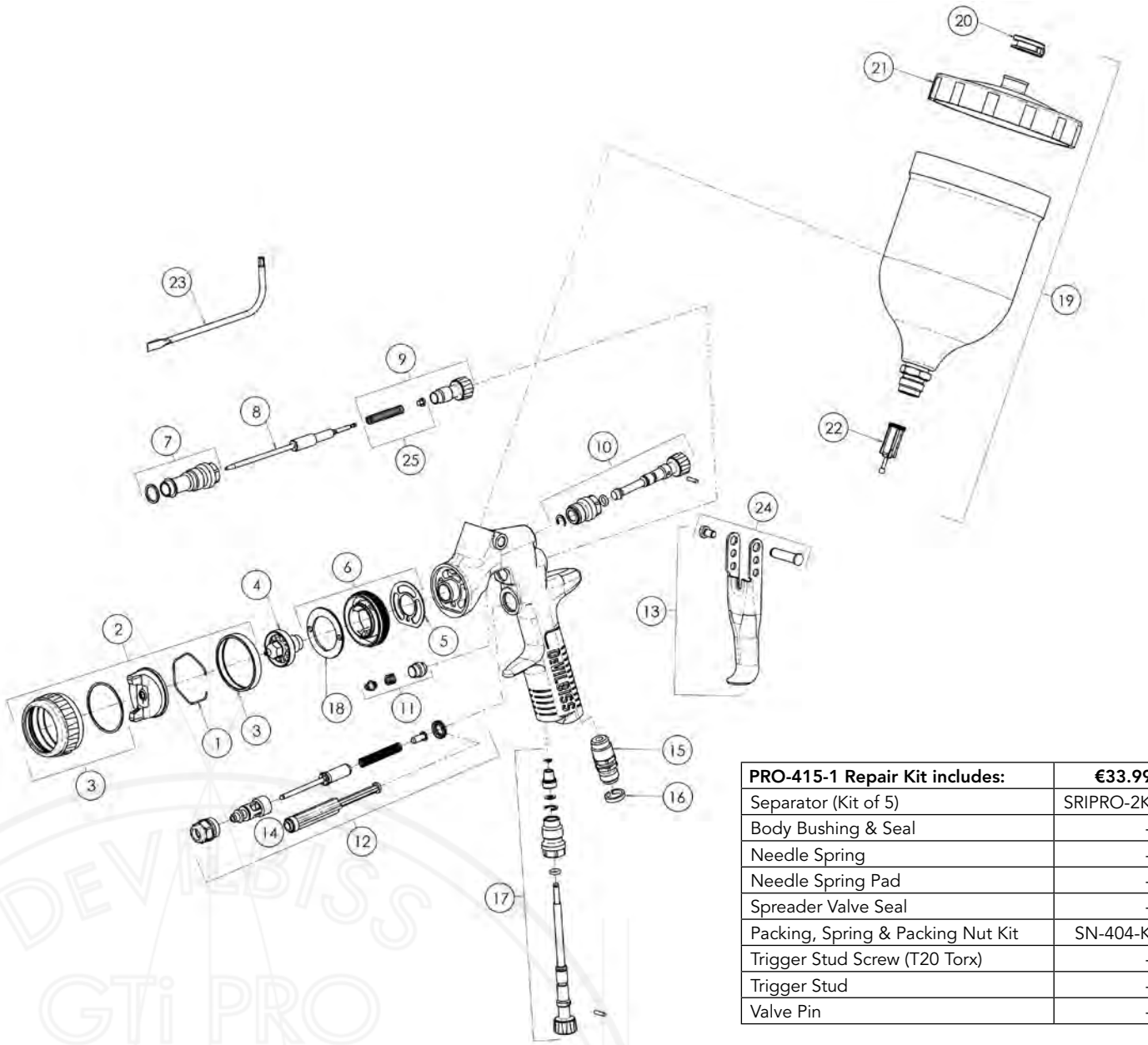

PRO-415-1 Repair Kit includes:	€33.99
Separator (Kit of 5)	SRIPRO-2K
Body Bushing & Seal	-
Needle Spring	-
Needle Spring Pad	-
Spreader Valve Seal	-
Packing, Spring & Packing Nut Kit	SN-404-K
Trigger Stud Screw (T20 Torx)	-
Trigger Stud	-
Valve Pin	-

Ref No	Description	Part Number	Price €
1	Air Cap Retaining Clip	JGA-156-K5	**20.39**
2	C1 Aircap & Ring	PROC-120-C1-K	**123.60**
	C2 Aircap & Ring	PROC-120-C2-K	**123.60**
3	Air Cap Retaining Ring & Seals	PRO-405-K	**51.29**
4	Fluid Tip (14, 16 & 18)	PROC-220-**-K	**POA**
5	Spray Head Seal (kit of 2)	SN-18-1-K2	**5.67**
6	Spray Head & Seal Kit	SN-17-1-K	**44.50**
7	Body Bushing & Seal	SN-6-K	**40.07**
8	Fluid Needle	GFGPRO-320-K	**36.77**
9	Fluid Adjusting Knob, Spring & Pad Kit	PRO-3-K	**31.00**
10	Spreader Valve Assembly	PRO-402-K	**39.76**
11	Packing, Spring & Packing Nut Kit	SN-404-K	**14.32**
12	Air Valve Replacement Kit	SN-402-K	**87.24**

Ref No	Description	Part Number	Price €
13	Trigger, Stud & Screw Kit	SN-21-K	**35.43**
14	Air valve seal & service tool	SN-34-K5	**21.53**
15	Air Inlet	SN-40-K	**14.52**
16	Colour ID Ring Kit (4 Colours)	SN-26-K4	**2.78**
17	Airflow Valve	PRO-411-K	**57.37**
18	Baffle plate	SN-41-K	**7.62**
19	Gravity Cup Kit	GFC-501	**43.78**
20	Drip Check Lid (kit of 5)	GFC-2-K5	**4.43**
21	Gravity Cup Lid	GFC-402	**3.40**
22	Filter	KGP-5-K5	**7.11**
23	Torx Key	SPN-8-K2	**9.89**
24	Trigger Stud & Torx Screw (kit of 5)	SN-405-K5	**66.95**
25	Needle spring and pad kit	SN-4-K3	**18.75**

FLG-5 GENERAL PURPOSE SPRAY GUN



- General purpose compliant spray gun for a wide range of refinish paints and coatings.
- Operates with unique and efficient DeVilbiss High Efficiency Atomisation Technology.
- Ergonomically shaped gun handle for positive grip and comfort.
- Smooth action trigger with exceptionally light pull for fatigue free operation.
- Ultra lightweight but strong, cast aluminium gun body.
- Full controls of pattern shape, fluid flow rate and air inlet pressure.
- Precision engineered brass air cap and stainless steel fluid tips.
- Choice of gravity or suction models with large capacity cups.
- NOT SUITABLE FOR USE WITH WATERBORNE MATERIALS.

Part Number Explanation

FLG - G5 - 14

Model | Gravity/Air Cap | Fluid Tip

Specification

Air inlet Pressure	2.0 bar (29 psi) – Suction & Gravity
Air Consumption	277 l/min (9.8 cfm)
Air Inlet Thread	1/4" Universal
Cup Capacity	Gravity 560 mls, Suction 1140 mls
Weight (gun & cup)	Gravity 642 gms, Suction 934 gms
Air Cap	Plated brass
Retaining Ring	Plated brass
Fluid Tip	Stainless Steel
Fluid Needle	Stainless Steel



FLG-5 Air Cap

FLG-5 Spray Gun Kit

Part No	Description	Price €
FLG-G5-14	Gravity Gun & Cup Kit – No 5 Air Cap & 1.4 mm Fluid Tip	POA
FLG-G5-18	Gravity Gun & Cup Kit – No 5 Air Cap & 1.8 mm Fluid Tip	POA
FLG-S5-18	Suction Gun & Cup Kit – No 5 Air Cap & 1.8 mm Fluid Tip	POA



4900-5-1-K3

Spares and Accessories

Part No	Description	Price €
FLG-1-5-K	No 5 High Efficiency Air Cap (Fits Gravity & Suction)	36.36
SGK-23-K	Air Cap Retaining Ring	14.01
SGK-12-14-K	1.4 mm fluid tip for gravity gun	29.15
SGK-12-20-K	2.0 mm fluid tip for gravity gun	29.15
SGK-14-18-K	1.8 mm fluid tip for suction and gravity guns	29.15
SGK-430-18-K	Fluid Needle (for 1.8 mm tip – Suction Gun)	13.49
SGK-420-K	Fluid Needle (for 2.0 mm tip – Gravity Gun)	13.49
SGK-418-K	Fluid Needle (for 1.8 mm tip – Gravity Gun)	13.49
SGK-414-K	Fluid Needle (for 1.4mm - Gravity Gun)	13.49
SGK-43-K10	Fluid Tip seal (pack of 10)	7.00
K-5030	Baffle Replacement Kit	25.96
K-5040	Repair kit – seals and springs – includes service tool	49.13
KGP-5-K5	Pack of gravity cup filters for GFC cup	7.11
MPV-60-K3	Male, quick detach, universal swivel – fits to gun air inlet	92.29
4900-5-1-K3	Pack of three cleaning brushes	12.36
KK-4584	Spray gun cleaning tool kit – purpose made brushes & tools	67.26
K-5370	Needle Packing	8.86



HAV-501-B



KK-4584



KGP-5-K5

Ref No	Description - Gravity Gun	Part Number	Price €
1	Retaining ring	SGK-23-K	**14.01**
2	Air cap	FLG-1-5-K	**36.36**
3	Fluid tip 1.4mm Fluid tip 1.8mm	SGK-12-14-K SGK-14-18-K	**29.15** **29.15**
	Fluid tip 2.0mm (available separately)	SGK-12-20-K	**29.15**
4	Gasket	SGK-43-K10	**7.00**
5	Baffle	*	-
6	Packing	K-5370	**8.86**
7	U-cup seal	*	-
8	Air-valve seat	*	-
9	Air-valve stem	*	-
10	Air-valve spring	*	-
11	Fluid needle 1.4mm	SGK-414-K	**13.49**
	Fluid needle 1.8mm	SGK-418-K	**13.49**
	Fluid needle 2.0mm (available separately)	SGK-420-K	**13.49**
12	Filter	KGP-5-K5	**7.11**
13	Lid assembly	GFC-402	**3.40**
14	Drip free vent lid kit of 5	GFC-2-K5	**4.43**
15	Cup assembly	GFC-501	**43.78**
16	Assembly tool	*	-

*	Seal, baffle and gasket replacement kit, items 4, 5, 6, 7, 8, 9, 10, and 16	K-5040	**49.13**
•	Baffle replacement kit, items 4 and 5.	K-5030	**25.96**

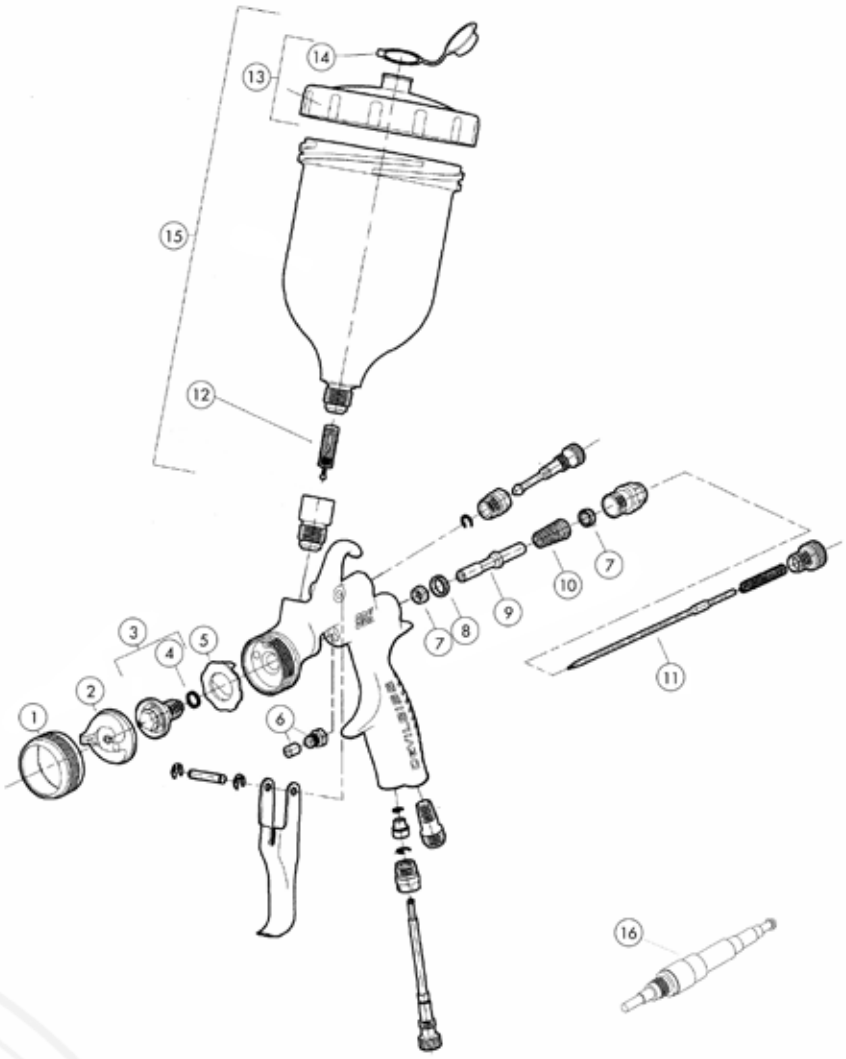

Ref No	Description - Suction Gun	Part Number	Price €
1	Retaining ring	**SGK-23-K**	**14.01**
2	Air cap	**FLG-1-5-K**	**36.36**
3	Fluid tip 1.8mm	**SGK-14-18-K**	**29.15**
4	Gasket	**SGK-43-K10**	**7.00**
5	Baffle	*	-
6	Packing	**K-5370**	**POA**
7	U-cup seal	*	-
8	Air-valve seat	*	-
9	Air-valve stem	*	-
10	Air-valve spring	*	-
11	Fluid needle 1.8mm	**SGK-430-18-K**	**13.49**
12	Assembly tool	*	-

*	Seal, baffle and gasket replacement kit, items 4, 5, 6, 7, 8, 9, and 10	**K-5040**	**49.13**
•	Baffle replacement kit, items 4 and 5	**K-5030**	**25.96**

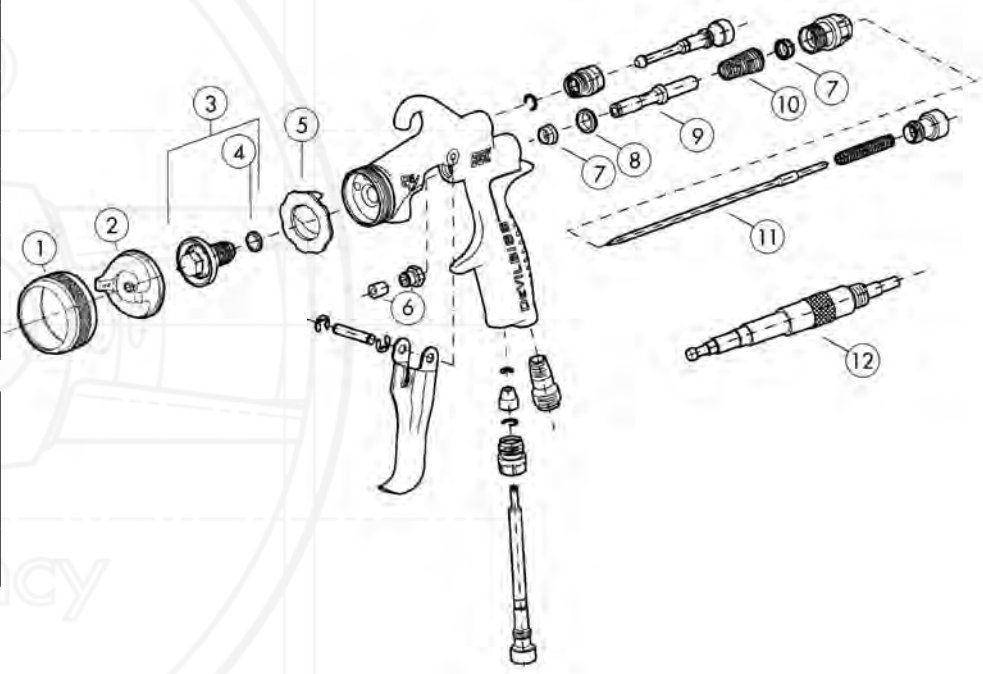

DAGR by DeVILBISS

GRAVITY FEED AIRBRUSH PERFORMANCE & VERSATILITY FOR AUTOMOTIVE ARTISTS

- **Sprays most automotive paints and lacquers.**
- **Hairline detail to high paint-flow shading and gradual fades.**
- **Lightweight, well balanced with smooth double action trigger.**
- **Crown cap standard for fine lines and needle protection.**
- **Copper, nickel and chrome plated body.**
- **Pre-set handle for precise control of paint flow.**
- **Removable 9 mls (1/3rd oz) gravity cup.**
- **Solvent proof fluid passages, PTFE needle packing.**
- **Precision made and hand tested in the U.S.A.**



Part Number

DGR - 501G - 35



Specification

Operating Pressure	1.3 – 3.5 bar (20 -50 psi)
Max inlet pressure	12 bar (175 psi)
Fluid tip	0.35mm
Cup Capacity	9 mls (1/3 fl/oz)
Airbrush plating	Nickel, copper, chrome
Needle Packing	PTFE (solvent proof)
Hose: Inside diameter	3.2 mm (1/8")
Air Hose connection	1/4" NPS (M)
Universal fluid threaded connector	3/8"

DAGR Airbrush Kit and Accessories

Part No	Description	Price €
DGR-501G-35	DAGR Gravity Airbrush - 0.35mm – 9 cc Cup/lid (1/3 fl/oz)	**249.26**
DGR-123	3m (10') Braided Nylon Air Hose with loose nut 1/4" swivel connections.	**37.60**
DGR-121K	Repair Kit - 'O' Rings, needle spring and washers	**25.96**
DGR-124	3m (10') Braided Air Hose with QD	**72.10**
DGR-127	Quick Disconnect Kit	**37.29**

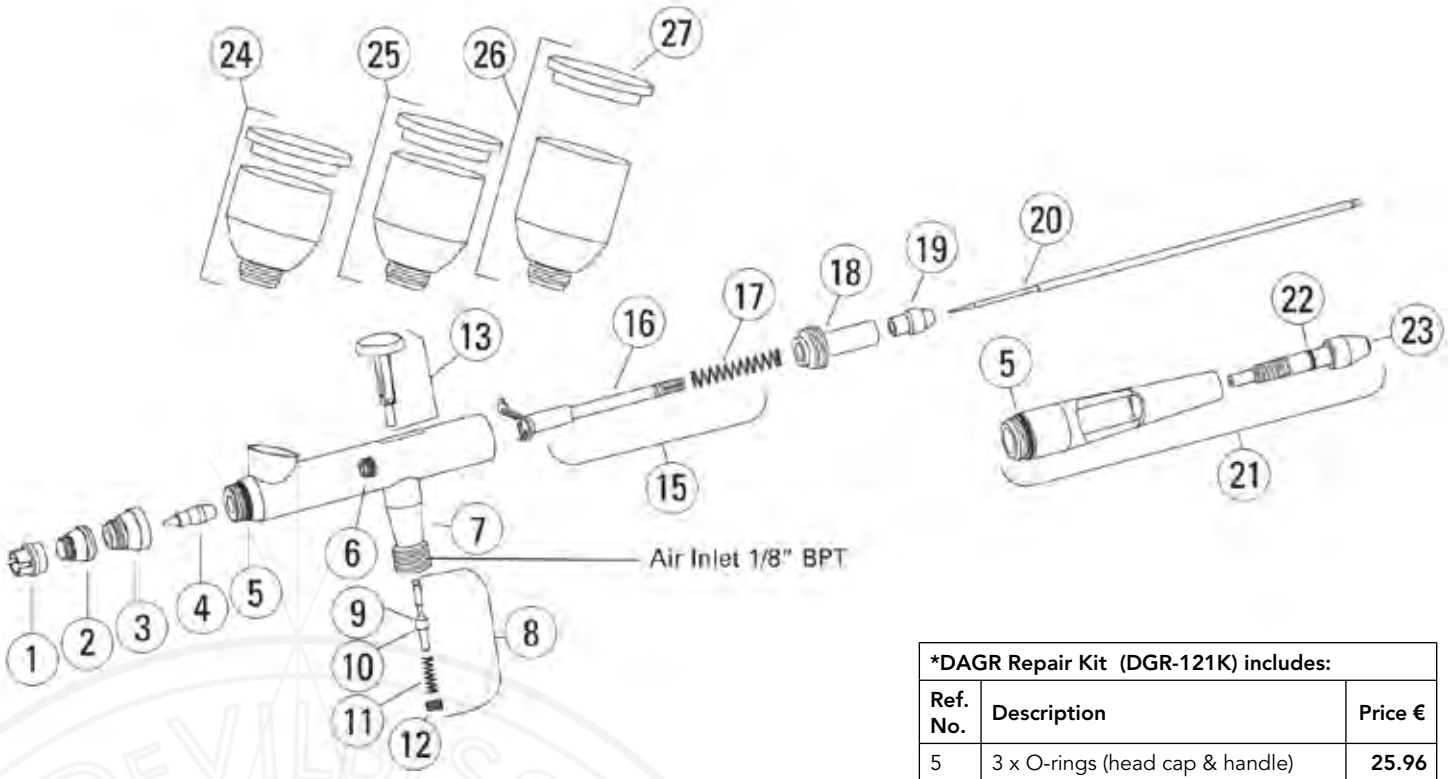

*DAGR Repair Kit (DGR-121K) includes:		
Ref. No.	**Description**	**Price €**
5	3 x O-rings (head cap & handle)	**25.96**
9	2 x Air valve o-ring	
17	1 x Needle spring	
22	1 x O-ring (pre-set needle knob)	

Ref. No.	Description	Part No.	Price €
1	Crown cap	DGR-101	**11.95**
2	Air cap (for .35mm nozzle)	DGR-103-35	**18.75**
3	Head cap	DGR-104	**8.76**
4	Nozzle (.35mm)	DGR-105-35	**65.41**
*5	O-ring (head cap & handle)	-	**-**
6	Packing and nut assembly (PTFE)	DGR-106K	**10.09**
7	Air valve casing	DGR-107	**10.51**
8	Air valve kit	DGR-308K	**32.86**
*9	Air valve o-ring	-	**-**
10	Air valve plunger	-	**-**
11	Air valve spring	-	**-**
12	Air valve nut	-	**-**
13	Trigger	DGR-323	**16.38**
15	Needle guide, rocker & spring	DGR-110K	**13.49**

Ref. No.	Description	Part No.	Price €
16	Needle guide and rocker	-	**-**
* 17	Needle spring	-	**-**
18	Spring guide	DGR-111	**7.73**
19	Needle locknut	DGR-112	**14.32**
20	Needle (for .35mm nozzle)	DGR-113-35	**31.00**
21	Cutaway handle w/pre-set	DGR-114	**30.59**
*22	O-ring (pre-set needle knob)	-	**-**
23	Pre-set needle knob	DGR-116	**9.27**
24	1/4 oz.(7 cc) cup and lid	DGR-117	**45.22**
25	1/3 oz.(9 cc) cup and lid (standard)	DGR-118	**45.22**
26	1/2 oz.(14 cc) cup and lid	DGR-119	**51.29**
27	Cup lid	DGR-120	**7.93**
28	DAGR repair kit	DGR-121K	**25.96**
30	O-ring (head cap & handle) kit (5)	DGR-18-K5	**13.60**

HIGH PERFORMANCE SUCTION & PRESSURE FEED SPRAY GUNS



- **Totally redesigned GTi Pro gun for suction or pressure feed duty and unique "QuickClean" coating.**
- **Ergonomic gun body with improved fit, feel, comfort and controls.**
- **Suitable for use with a suction cup or pumps, tanks or remote feed cups.**
- **Four advanced air cap choices to suit solids, metallics, bases and clears.**
- **A range of pressure & suction tip sizes for varying viscosities and control preferences.**
- **Balanced air valve design for ultra smooth triggering and control.**
- **Renowned DeVilbiss atomisation quality and even paint distribution.**
- **Faster, easier maintenance from user-friendly fittings and adjustments.**
- **Rugged drop forged body with anodised finish for protection.**

Part Number Explanation

PROGTI - STE10 - 16BK
PROGTI - PTE40 - 10BK

Model Air Cap Fluid Tip



TE10 High Efficiency Air Cap



TE20 High Efficiency Air Cap



TE30 High Efficiency Air Cap
(Pressure only)



TE40 High Efficiency Air Cap
(Pressure only)

Specification

Air Inlet Pressure	2.0 bar (29 psi)
Air Consumption	TE10: 270 l/min (9.5 cfm) TE20: 360 l/min (12.7 cfm) TE30: 365 l/min (12.9 cfm) TE40: 350 l/min (12.4 cfm)
Air inlet thread	Universal 1/4" BSP/NPS
Fluid inlet thread	Universal 3/8" BSP/NPS

Max static air inlet pressure	P1 = 12 bar (175 psi)
Max static fluid inlet pressure	P2 = 14 bar (203 psi)
Air Cap	Plated Brass
Air Cap Retaining Ring	Clear Anodised Aluminium
Fluid Tip & Needle	Stainless Steel
Suction gun & cup weight	1011 gms
Pressure gun weight	564 gms

GTi Pro Suction / Pressure Spray Gun Kits

When ordering please specify the air cap and tip size required.

Part No Examples	Description	Price €
PROGTI-STE10-16BK	Suction Feed Gun with TE10 air cap and No. 16 fluid tip	**695.25**
PROGTI-PTE40-10BK	Pressure Feed Gun with TE40 air cap and No. 10 fluid tip	**580.92**

GTI Pro kits include: suction cup with filter (suction kits only), cleaning brush, torx key, set of 4 identification rings and combination spanner



MPV-60-K3

Accessories

Part No	Description	Price €
PRO-102-TE10-K	TE10 High Efficiency Air Cap and retaining ring	**123.60**
PRO-102-TE20-K	TE20 High Efficiency Air Cap and retaining ring	**123.60**
PRO-102-TE30-K	TE30 High Efficiency Air Cap and retaining ring	**123.60**
PRO-102-TE40-K	TE40 High Efficiency Air Cap and retaining ring	**123.60**
PRO-200-**-K	Suction/Pressure Fluid Tip - Size Numbers 16, 18 & 20	**POA**
PRO-315-K	Suction/Pressure Fluid Needle for 16, 18 & 20 Tip sizes	**36.77**
PRO-205-**-K	Pressure Fluid Tip - Size Numbers 085, 10, 12 & 14	**POA**
PRO-305-085-10-K	Pressure Fluid Needle for 085 & 10 Tip sizes	**36.77**
PRO-305-12-14-K	Pressure Fluid Needle for 12 & 14 Tip sizes	**36.77**
PRO-415-1	Spray Gun Service/Repair Kit	**33.99**
SPN-8-K2	Torx & flat blade Screwdriver - Trigger & Needle Packing	**9.89**
MPV-60-K3	Male Quick Detach Uni Swivel - fits to gun air inlet	**92.29**
HAF-507	Lightweight in-line air filter	**15.45**
4900-5-1-K3	Pack of three cleaning brushes	**12.36**
VSA-512	Strainer Assembly	**48.51**



PRO-415-1



HAF-507

** = Fluid tip size

Please note that these parts only fit the current coloured gun models, please see page 63 for information on the original pre-2016 model.

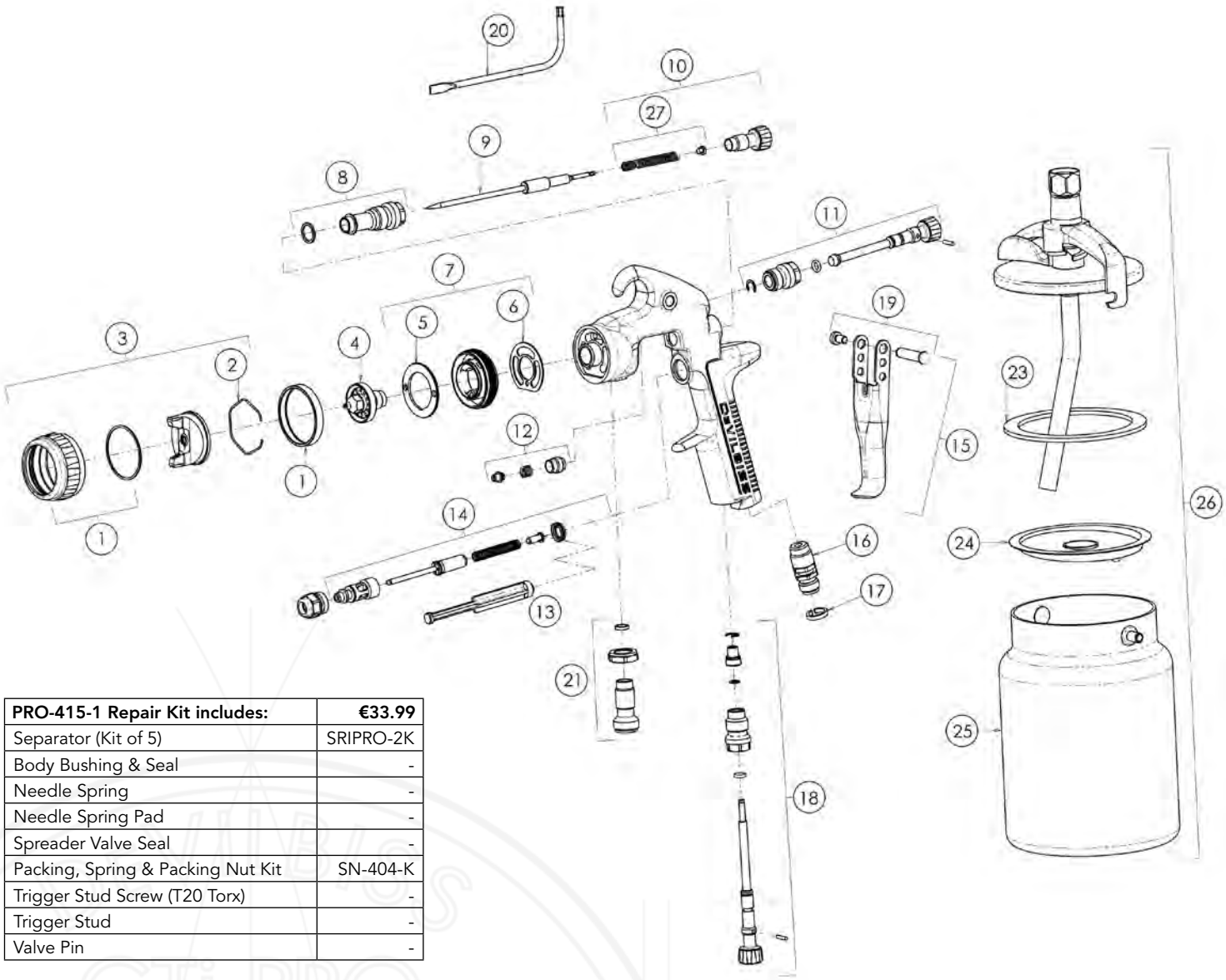

PRO-415-1 Repair Kit includes:	€33.99
Separator (Kit of 5)	SRIPRO-2K
Body Bushing & Seal	-
Needle Spring	-
Needle Spring Pad	-
Spreader Valve Seal	-
Packing, Spring & Packing Nut Kit	SN-404-K
Trigger Stud Screw (T20 Torx)	-
Trigger Stud	-
Valve Pin	-

Ref. No.	Description	Part No.	Price €
1	Air Cap Retaining Ring	PRO-420-K	**44.50**
2	Air Cap Retaining Clip	JGA-156-K5	**20.39**
3	Aircap & Ring	See page 22	-
4	Fluid Tip	See page 22	-
5	Baffle Plate	SN-41-K	**7.62**
6	Spray Head Seal (kit of 2)	SN-18-1-K2	**5.67**
7	Spray Head & Seal Kit	SN-69-K	**44.50**
8	Body Bushing & Seal	SN-6-K	**40.07**
9	Fluid Needle	See page 22	-
10	Fluid Adjusting Knob, Spring & Pad Kit	PRO-5-K	**31.00**
11	Spreader Valve Assembly	PRO-408-K	**39.76**
12	Packing, Spring & Packing Nut Kit	SN-404-K	**14.32**
13	Air Valve Seal	SN-34-K5	**21.53**
14	Air Valve Assembly	SN-402-K	**87.24**

Ref. No.	Description	Part No.	Price €
15	Trigger, Stud & Screw Kit	SN-21-K	**35.43**
16	Air Inlet	SN-9-K	**19.36**
17	Colour ID Ring Kit (4 Colours)	SN-26-K4	**2.78**
18	Airflow Valve	PRO-407-K	**57.37**
19	Stud and Screw kit	SN-405-K5	**66.95**
20	Torx Key	SPN-8-K2	**9.89**
21	Fluid Inlet Connector Kit	PRO-12-K	**18.03**
22	Cup Lid Assembly	KR-4001-B	**74.06**
23	Lid Gaskets - kit of 3	KR-11-K3	**6.49**
24	Drip Free Diaphragms - Kit of 5	KR-115-K5	**8.14**
25	Cup Only	KR-466-K	**58.30**
26	Complete Cup Assembly	KR-566-1-B	**109.18**
27	Needle spring and pad kit	SN-4-K3	**18.75**

HIGH PERFORMANCE SUCTION & PRESSURE FEED SPRAY GUNS



- **The lightweight gun, redesigned for suction or pressure feed duty with unique "QuickClean" coating.**
- **Ergonomic gun body design with even better fit and balance for comfort and control.**
- **A range of pressure & suction tip sizes for varying viscosities and control preferences.**
- **Four advanced air cap choices to suit all materials and coatings.**
- **Utilises coaxial air valve design for ultra-smooth triggering and control.**
- **Renowned DeVilbiss atomisation quality and even paint distribution.**
- **Faster, easier maintenance from user-friendly fittings and adjustments.**

Part Number Explanation

PROLT - STE10 - 16BK
PROLT - PTE40 - 10BK

Model Air Cap Fluid Tip



TE10 High Efficiency Air Cap



TE20 High Efficiency Air Cap



TE30 High Efficiency Air Cap
(Pressure only)

TE40 High Efficiency Air Cap
(Pressure only)

Specification

Air Inlet Pressure	2.0 bar (29 psi)
Air Consumption	TE10: 270 l/min (9.5 cfm) TE20: 360 l/min (12.7 cfm) TE30: 365 l/min (12.9 cfm) TE40: 350 l/min (12.4 cfm)
Air Inlet Thread	Universal 1/4" BSP/NPS
Fluid Inlet Thread	Universal 3/8" BSP/NPS
Max Static air inlet pressure	P1 = 12 bar (175 psi)
Max Static fluid inlet pressure	P2 = 15 bar (215 psi)

Suction Cup Capacity	1 litre
Weight (gun only)	490 gms
Weight (gun & suction cup)	925 gms
Air Cap	Plated Brass
Air Cap Retaining Ring	Clear Anodised Aluminium
Fluid Tip	Stainless Steel
Fluid Needle	Stainless Steel

GTi Pro LITE Spray Gun Kits

When ordering please specify the air cap of your choice and the tip size of your choice.

Part No Examples	Description	Price €
PROLT-STE10-16BK	Suction gun & cup kit with TE10 High Efficiency air cap & #16 fluid tip	**695.25**
PROLT-PTE40-10BK	Pressure gun kit with TE40 High Efficiency air cap & #10 fluid tip	**580.92**

GTI Pro LITE kits include: suction cup with filter (suction kits only), cleaning brush, torx key, set of 4 identification rings and combination spanner



MPV-60-K3

Accessories

Part No	Description	Price €
PRO-102-TE10-K	TE10 High Efficiency Air Cap and retaining ring	**123.60**
PRO-102-TE20-K	TE20 High Efficiency Air Cap and retaining ring	**123.60**
PRO-102-TE30-K	TE30 High Efficiency Air Cap and retaining ring	**123.60**
PRO-102-TE40-K	TE40 High Efficiency Air Cap and retaining ring	**123.60**
PRO-200-**-K	Fluid Tip – Suction feed - Size Numbers 16, 18 & 20	**POA**
PRO-205-**-K	Fluid Tip – Pressure feed – Size Numbers (085, 10, 12 & 14)	**POA**
PRO-325-K	Suction Fluid Needle for 16, 18 & 20	**36.77**
PRO-320-085-10-K	Pressure Fluid Needle for 085 & 10 tip sizes	**36.77**
PRO-320-12-14-K	Pressure Fluid Needle for 12 & 14 tip sizes	**36.77**
PRO-470	Spray Gun Service/Repair Kit	**33.99**
SN-406	Gun wrench, Torx & flat back screwdriver, cleaning brush and colour ID rings	**19.36**
MPV-60-K3	Pack of three male quick detach uni swivel - fits to gun air inlet	**92.29**
HAF-507	Lightweight in-line air filter	**15.45**
4900-5-1-K3	Pack of three cleaning brushes	**12.36**
VSA-512	Strainer Assembly	**48.51**



HAF-507



PRO-470

**** = Air Cap
** = Fluid tip size

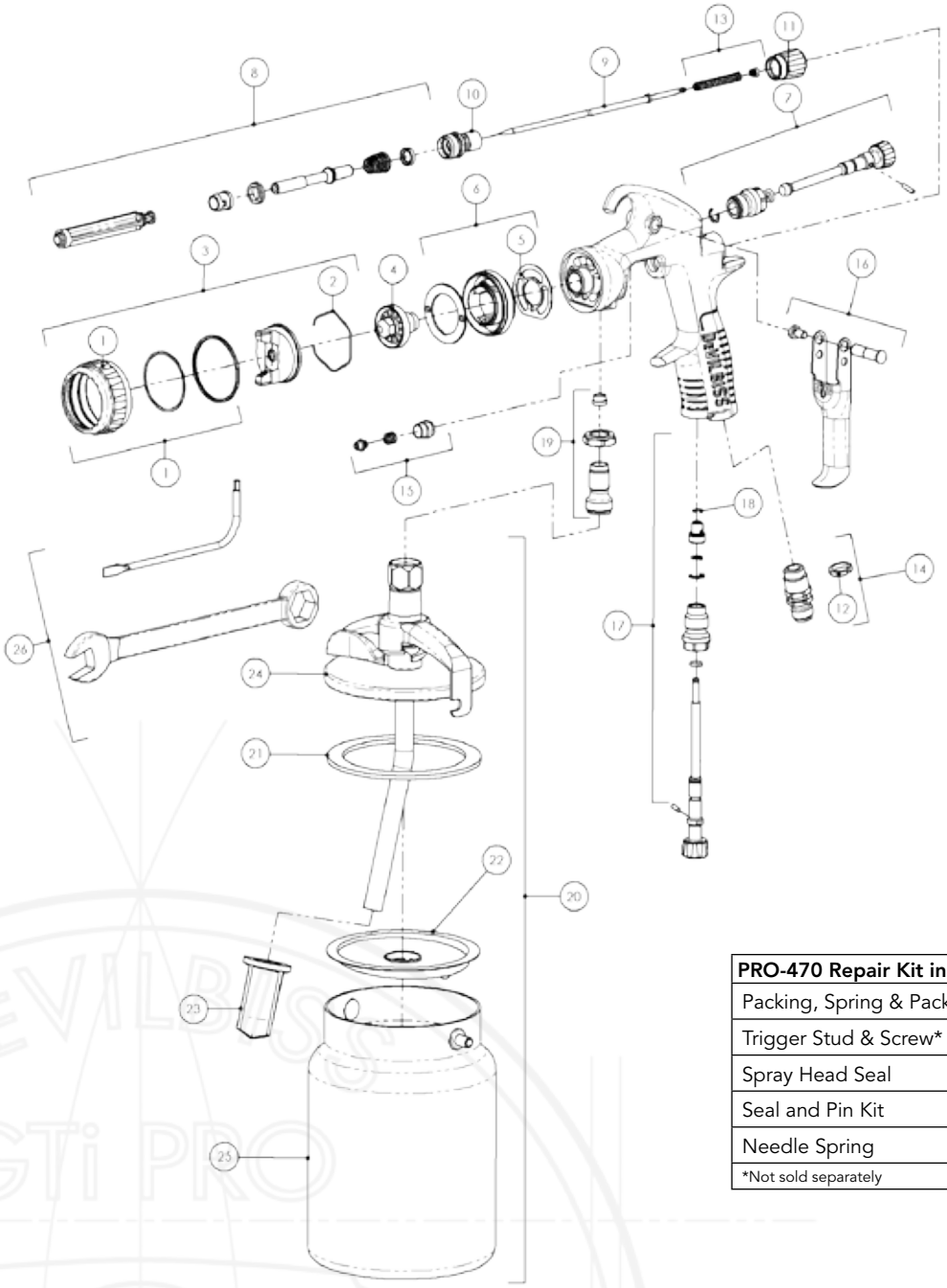

PRO-470 Repair Kit includes:	€33.99
Packing, Spring & Packing Nut	SN-404
Trigger Stud & Screw*	
Spray Head Seal	SN-18-1
Seal and Pin Kit	GTI-428-K5
Needle Spring	PRO-472
*Not sold separately	

Ref No	Description	Part Number	Price €
1	Air Cap Retaining Ring & Seal	PRO-420-K	**44.50**
2	Air Cap Retaining Clip	JGA-156-K5	**20.39**
3	High Efficiency Aircap & Ring	See Page 24	-
4	Fluid Tip Kit	See Page 24	-
5	Spray Head Seal	SN-18-1-K2	**5.67**
6	Spray Head Kit	SN-69-K	**44.50**
7	Spreader Valve Assembly	PRO-408-K	**39.76**
8	Air Valve Kit	PRO-471	**73.75**
9	Fluid Needle	See Page 24	-
10	Housing	SN-66-K	**18.33**
11	Fluid Adjusting Knob	SN-67-C-K	**11.54**
12	Colour ID Ring Kit (4 Colours)	SN-26-K4	**2.78**
13	Needle spring kit	PRO-472-K3	**12.98**

Ref No	Description	Part Number	Price €
14	Air Inlet Kit	SN-9-K	**19.36**
15	Packing, spring and packing nut kit	SN-404-K	**14.32**
16	Trigger, stud & Screw Kit	SP-617-CR-K	**35.43**
17	Airflow valve	PRO-407-K	**57.37**
18	Circlip - kit of 5	25746-007-K5	**20.39**
19	Fluid inlet kit	ADV-7-K	**19.26**
Suction Cup Models only			
20	Suction cup kit	KR-566-1-B	**109.18**
21	Cup lid gasket - kit of 3	KR-11-K3	**6.49**
22	Drip check Diaphragm (kit of 5)	KR-115-K5	**8.14**
23	Filter - kit of 10	KR-484-K10	**39.86**
24	Lid assembly	KR-4001-B	**74.06**
25	Cup	KR-466-K	**58.30**

PROFESSIONAL CONVENTIONAL SUCTION & PRESSURE FEED SPRAY GUN



- **Totally redesigned JGA gun for professional use.**
- **Renowned DeVilbiss atomisation quality and even paint distribution.**
- **Balanced air valve design for ultra smooth triggering and control.**
- **Rugged drop forged body with anodised finish for protection.**
- **A choice of three advanced technology air caps to suit solids and metallics.**
- **Three fluid tip sizes for varying viscosities and control preferences.**
- **Ergonomic gun body with improved fit, feel, comfort and control.**
- **Faster, easier maintenance from user-friendly fittings and adjustments.**

Part Number Explanation

JGASPRO (or JGAPPRO) - C1 - XX

Model — Air Cap — Fluid Tip



No C1 Air Cap



No C2 Air Cap



No C3 Air Cap
(Pressure only)

Specification

Air Inlet Pressure	C1: 2.5 - 3.0 bar (30 - 45 psi) C2: 2.5 - 4.0 bar (30 - 58 psi) C3: 2.5 - 4.0 bar (30 - 58 psi)
Air Consumption	C1: 300 l/min (10.6 cfm) @ 3.0 bar C2: 305 l/min (12.8 cfm) @ 3.0 bar C3: 410 l/min (14.5 cfm) @ 3.0 bar
Air Inlet Thread	1/4" Universal

Fluid Inlet Thread	3/8" Universal
Cup Capacity	1000 mls
Weight (gun & cup, S)	1070 gms
Weight (gun, P)	650 gms
Air Cap & Ring	Plated Brass
Fluid Tip	Stainless Steel
Fluid Needle	Stainless Steel

JGA Pro Spray Gun Kits

When ordering please specify the air cap (C1, C2 or C3) and the tip size of choice (12, 14, 16, 18 or 085).

Part No Examples	Description	Price €
JGASPRO-C1-16	Suction Feed Gun with C1 air cap and No. 16 fluid tip	**515.00**
JGAPPRO-C3-085	Pressure Feed Gun with C3 air cap and No. 085 fluid tip	**493.37**

JGA Pro kits include: suction cup with filter (suction kits only), cleaning brush, torx key, set of 4 identification rings and combination spanner



MPV-60-K3



KR-484-K10



PRO-415-1

Accessories

Part No	Description	Price €
PROC-120-C1-K	C1 Air Cap and retaining ring	**123.60**
PROC-120-C2-K	C2 Air Cap and retaining ring	**123.60**
PROC-120-C3-K	C3 Air Cap and retaining ring	**123.60**
PROC-220-**-K	Suction Fluid Tip - Size Numbers 16 or 18	**POA**
JGAPRO-330-K	Suction Fluid Needle for 14, 16 or 18 Fluid Tips	**36.77**
PROC-230-**-K	Pressure Fluid Tip - Size Numbers 085, 10, 12 or 14	**POA**
PRO-305-085-10-K	Pressure Fluid Needle to match 085 & 10 Tip sizes	**36.77**
PRO-305-12-14-K	Pressure Fluid Needle to match 12 & 14 Tip sizes	**36.77**
PRO-415-1	Spray Gun Service/Repair Kit	**33.99**
SPN-8-K2	Torx & flat blade Screwdriver for - Trigger & Needle Packing	**9.89**
SN-406	Gun wrench, Torx & flat back screwdriver, cleaning brush and colour ID rings	**19.36**
MPV-60-K3	Male Quick Detach Uni Swivel - fits to gun air inlet	**92.29**
HAF-507	Lightweight in-line air filter.	**15.45**
4900-5-1-K3	Pack of three cleaning brushes	**12.36**
KR-484-K10	Pack of 10 suction cup paint strainers	**39.86**
VSA-512	Strainer Assembly	**48.51**

** = Fluid tip size

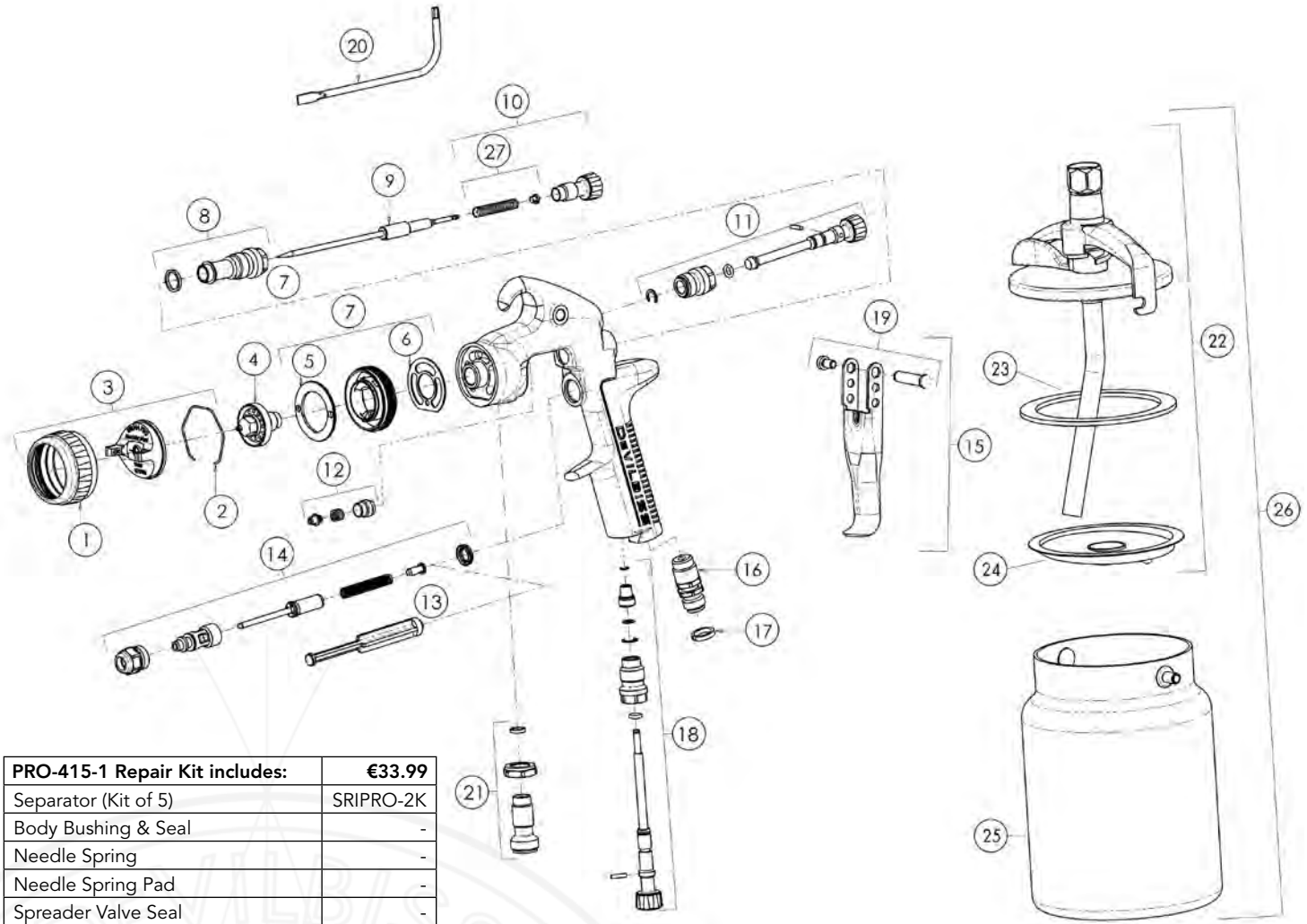

PRO-415-1 Repair Kit includes:	€33.99
Separator (Kit of 5)	SRIPRO-2K
Body Bushing & Seal	-
Needle Spring	-
Needle Spring Pad	-
Spreader Valve Seal	-
Packing, Spring & Packing Nut Kit	SN-404-K
Trigger Stud Screw (T20 Torx)	-
Trigger Stud	-
Valve Pin	-

Ref. No.	Description	Part No.	Price €
1	Air Cap Retaining Ring	PRO-405-K	**51.29**
2	Air Cap Retaining Clip	JGA-156-K5	**20.39**
3	Aircap & Ring	See page 26	-
4	Fluid Tip	See page 26	-
5	Baffle Plate	SN-41-K	**7.62**
6	Spray Head Seal (kit of 2)	SN-18-1-K2	**5.67**
7	Spray Head & Seal Kit	SN-17-1-K	**44.50**
8	Body Bushing & Seal	SN-6-K	**40.07**
9	Fluid Needle	See page 26	-
10	Fluid Adjusting Knob, Spring & Pad Kit	PRO-3-K	**31.00**
11	Spreader Valve Assembly	PRO-404-K	**27.60**
12	Packing, Spring & Packing Nut Kit	SN-404-K	**14.32**
13	Air Valve Seal	SN-34-K5	**21.53**
14	Air Valve Assembly	SN-402-K	**87.24**

Ref. No.	Description	Part No.	Price €
15	Trigger, Stud & Screw Kit	SN-21-K	**35.43**
16	Air Inlet	SN-40-K	**14.52**
17	Colour ID Ring Kit (4 Colours)	SN-26-K4	**2.78**
18	Airflow Valve	PRO-411-K	**57.37**
19	Stud and Screw kit	SN-405-K5	**66.95**
20	Torx Key	SPN-8-K2	**9.89**
21	Fluid Inlet Connector Kit	PRO-12-K	**18.03**
22	Cup Lid Assembly	KR-4001-B	**74.06**
23	Lid Gaskets - kit of 3	KR-11-K3	**6.49**
24	Drip Free Diaphragms - Kit of 5	KR-115-K5	**8.14**
25	Cup Only	KR-466-K	**58.30**
26	Complete Cup Assembly	KR-566-1-B	**109.18**
27	Needle spring and pad kit	SN-4-K3	**18.75**

SLG-620 GENERAL PURPOSE BUDGET SPRAY GUN



- General purpose gravity feed compliant spray gun.
- Lightweight and strong aluminium construction.
- Smooth fluid flow and pattern shape controls.
- Ergonomically shaped handle for positive grip.
- Precision engineered brass air cap provides excellent atomisation of most popular compliant automotive refinish materials.
- Fitted with a tough Acetal 550ml cup.
- The kit includes: a removable paint filter, a cleaning brush and universal spanner for easy cleaning and maintenance.

Specification

Air Inlet Pressure	2.0 Bar
Air Consumption	250 l/min (8.8 cfm)
Air Inlet Thread	1/4" Universal
Cup Capacity	550ml
Weight (gun & cup)	Gun 480g / Cup 160g
Air Cap	Brass - Nickel Plated
Retaining Ring	Anodised Aluminium
Fluid Tip	Stainless Steel
Fluid Needle	Stainless Steel



Part No	Description	Price €
SLG-620-13-K10	Gravity Gun with 1.3mm fluid tip	**POA**
SLG-620-18-K10	Gravity Gun with 1.8mm fluid tip	**POA**
SLG-620-25-K10	Gravity Gun with 2.5mm fluid tip	**POA**
SLG-450	Gravity Cup and Lid	**26.99**

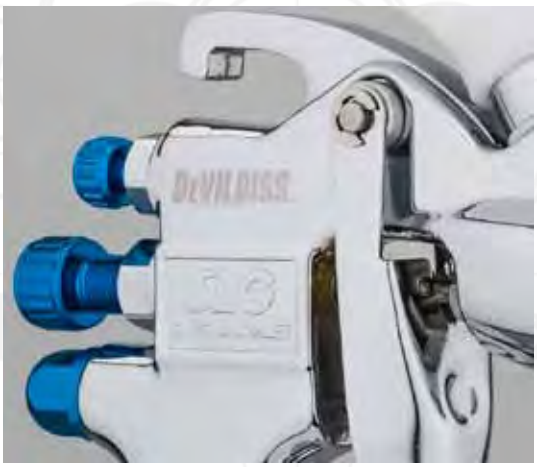

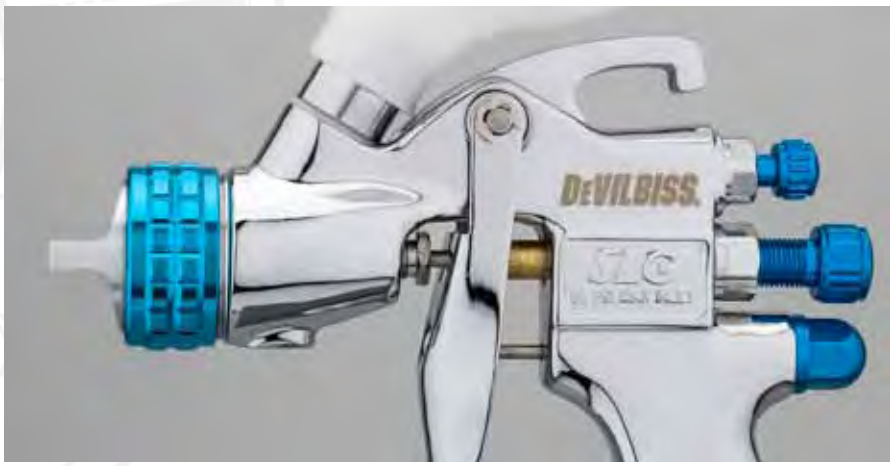

SLG-650 GENERAL PURPOSE PAINTING AND TOUCH-UP KIT



- **Custom designed, robust plastic carry case containing a comprehensive refinishing and touch up kit.**
- **The kit comprises the SLG lightweight aluminium general purpose spray gun and the HVLP touch up/detailing gun.**
- **The full size compliant SLG spray gun is fitted with a 1.3mm fluid tip and needle, a solid brass air cap and an aluminium 600ml paint cup.**
- **The HVLP touch up/detailing gun comes complete with a 1mm fluid tip and needle, a solid brass air cap and a 250ml paint cup.**

Specification

	Full Size	Touch Up
Air Inlet Pressure	2.0 Bar	
Air Consumption	250 l/min (8.8 cfm)	
Air Inlet Thread	1/4" Universal	
Cup Capacity	600ml	250ml
Weight (gun & cup)	Gun 480g / Cup 160g	Gun 260g / Cup 90g
Air Cap	Brass - Nickel Plated	
Retaining Ring	Anodised Aluminium	
Fluid Tip	Stainless Steel	
Fluid Needle	Stainless Steel	



Part No	Description
SLG-650-K4	Two gun case kit includes: Compliant Spray Gun (General Purpose), 1.3 mm HVLP Spray Gun (Touch-Up), 1.0 mm One 600 ml Cup One 250 ml Cup Fluid Tip & Needle, 1.8 mm Cleaning Brushes Wrench Air Adjusting Valve with Gauge
Price €	**POA**

Pro CLEAN by DeVILBISS

PRO CLEAN GUN WASH CLEANING MACHINE



- **Faster, cleaner and more efficient than conventional gun wash machines.**
- **Can be used for waterborne and solvent applications.**
- **Significantly reduces solvent use and wastage dramatically reducing gun cleaning costs.**
- **Fresh solvent is used every time ensuring no contamination and rapid colour changes.**
- **The compact unit can be wall mounted to maximise floor space in the mix room.**
- **500ml colour coded waterborne and solvent aerosols are easily clipped in and out of the machine.**
- **One 500ml can will clean up to 32 spray guns.**

Part Number: DEV-FHAZ1011

Specification

Dimensions	H: 900 mm W: 245 mm D: 275 mm
Weight	9 kg
Max Air Pressure	8 bar (116 psi)
Min Air Pressure	6 bar (86 psi)
ATEX Safety Approval	CE Ex II 3G c IIA T6





Pro Clean Gun Wash Machine

Part No	Description	Price €
DEV-FHAZ1011	Complete Pro Clean unit	**1,491.44**
DEV-FHFZ1004	Pro Clean Waterborne Aerosol (Pack of 12)	**189.52**
DEV-FHFZ1013	Pro Clean Solvent Aerosol (Pack of 12)	**189.52**

SAVE TIME: Less than a minute for a completely clean spray gun

SAVE COST: One 500ml can of cleaner will clean up to 32 spray guns

SAVE SPACE: Can be wall mounted to keep the floor space clear

SAVE WASTE: Highly efficient, less than 16 ml of cleaning solution to clean a gun

DMG AIR DRYER GUNS AND SYSTEMS



- **A versatile system to speed up the drying process.**
- **DMG guns multiply their intake by a factor of 7 to give generous air volumes.**
- **A fully adjustable aerodry stand provides full dryer flexibility.**
- **Solvent resistant for cleaning in gun wash machines.**
- **DMG guns feature intake debris filters and shut-off valves.**

Specification

Air consumption per gun at 3.4 bar (50 psi)	325 l/min (11.5cfm)
Recommended working pressure range	2-4 bar (30 – 60 psi)
Noise level at 3.4 bar (50 psi)	83 dba

DMG Air Dryer Systems

Part No	Description	Price €
DMG-501-K	Single Air Dryer gun – boxed	**100.84**
DMG-620	Two gun stand system with hose	**392.43**



Accessories

Part No	Description	Price €
DMG-5-K3	Pack of 3 dryer inlet filters	**41.20**
DMG-520-K	Air dryer stand and hose	**247.20**
H-6086	10m Air hose with female quick detach and swivel/loose nut fittings	**131.84**
MPV-424	Female, self sealing, QD air line fitting	**51.29**
MPV-5	Male stem, QD air line fitting with 1/4" BSP (F)	**11.12**



DGi Pro® by DeVILBISS

DGi Pro® pod



- **Perfectly positioned for easy checking.**
- **Accurate digital "bar" read-out of working pressure.**
- **Optimise your gun performance as you work.**
- **Accurate readings to within 0.05 bar (0.7 psi).**
- **Fully ATEX Approved – totally gun washer safe.**
- **Air flow "cheater" valve adjusts the gauge.**
- **Fitted in minutes - replaces standard spreader valve.**

Specification	
Air Connections (M & F)	1/4" Universal (BSP/NPS)
Accuracy	+ or – 1%
Resolution steps	0.05 bar (0.7 psi)
Max static inlet pressure	12 bar (175 psi)
Housing	Die cast aluminium, nickel/chrome plated.
Readout window	Toughened glass
ATEX safety approval	CE Ex 11 1G EEx ia IIC T4

Part numbers		Price €
704426	Digital gauge - Retrofit to DV1 guns only	**184.16**
DGIPRO-503-BAR-K	DGi PRO pod gauge - Retrofit to GTI Pro guns only	**202.91**
DGIPRO-504-BAR-K	DGi PRO pod gauge - Retrofit to GTI Pro LITE guns only	**202.91**

Spare parts		Price €
SN-52-K5	DGI Pro adjusting valve seals	**15.55**
MPV-60-K3	Male quick detach swivel	**92.29**
SN-57-K5	Air inlet aperture inserts	**12.77**



704426
(For DV1)



DGIPRO-504-BAR-K
(For 2016 GTi Pro &
all GTi Pro LITE models)



DGIPRO-503-BAR-K
(For Pre-2016 GTi Pro)

DISPOSABLES: US PATENT NOS. 6,820,824 AND 7,374,111 OWNED BY 3M INNOVATIVE PROPERTIES CO.
ADDITIONAL US PATENTS: NOS. 7,353,964; 7,344,040; 7,086,549
EUROPEAN PATENT NO. 0 954 381 B2 OWNED BY 3M INNOVATIVE PROPERTIES CO.

RE-USABLES: U.S. PATENT NOS. 6,820,824 AND 7,374,111 OWNED BY 3M INNOVATIVE PROPERTIES CO.
ADDITIONAL U.S. PATENTS: NOS. 7,380,680; 7,354,074; 7,353,964; 7,350,418; 7,344,040; 7,263,893; 7,165,732; 7,086,549.

DEKUPS by DEVILBISS

DEKUPS DISPOSABLE PAINT CUPS SYSTEMS

- **Stable and positive cup to gun location.**
- **Consistent paint flow, reduced risk of spray performance changes.**
- **Practical 710cc size gives ideal weight to quantity ratio.**
- **Choice of disc filters for waterborne basecoats or washable stick filters for clears and primers.**
- **Supplied in convenient wall mounting dispenser packs.**
- **Lightweight gun adaptor with spiral lock mechanism.**
- **No threads on outer cup lids to get contaminated and stubborn.**
- **Storage plugs for liners supplied in the kit.**
- **Funnels for liner top ups and gun flushing bottles available.**



Part No	Description	Price €
DPC-601	DeKups disposable cup system kit – 32 disposable liners, 32 disposable lids	**53.87**
DPC-606	Reusable lid and sleeve kit	**22.04**
DPC-602	9oz. disposable lids & liners	**53.87**
DPC-607	9oz. re-usable lid & sleeve kit	**18.33**



DPC-607

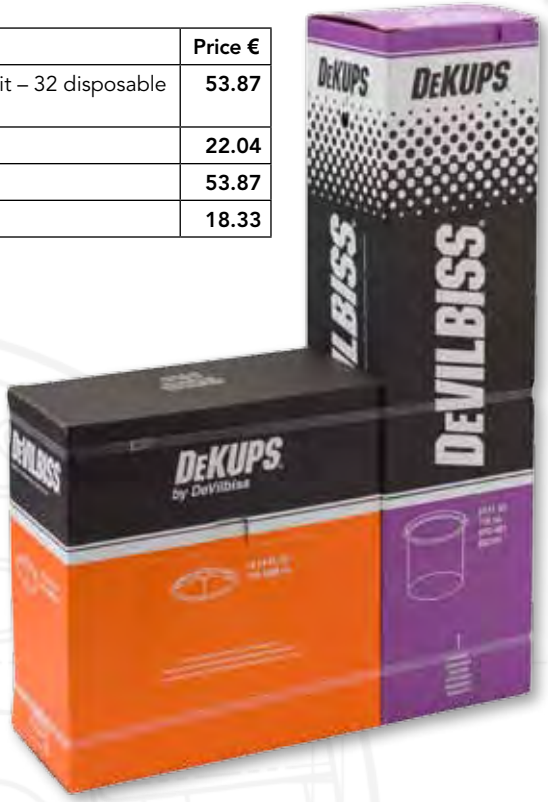

Part No	Description	Price €
DPC-10	Adaptor for SATA NR 2/3000, RP, KLC, MCB & Jet 90 series & Sata 96719	**18.03**
DPC-11	Adaptor for SATA NR95, Iwata LPH-400 & W400LV	**18.03**
DPC-13	Adaptor for Sagola (DeKup)	**18.03**
DPC-23	Adaptor 9oz – for SRI PRO	**18.03**
DPC-502	Adaptor for SATA Minijet QCC	**24.21**
DPC-78	Adaptor For Iwata Supernova	**18.03**
DPC-43	Adaptor for DeVilbiss DV1, Pro LITE, GTi, PRI, GFG, Binks M1G, Sharpe Cobalt, Platinum & Titanium	**18.03**

Part No	Description	Price €
DPC-501	Adaptor for SATA QC	**18.03**
DPC-42-K24	Disc Filter Kit – 125 micron filter screen	**17.10**
DPC-27-K10	Stick Filter – 200 micron filter screen	**18.03**
DPC-65-K24	9.oz 125 micron Disc Filter (24 Pack)	**21.73**
DPC-6-K10	Plug Kit (Pack Of 10)	**2.88**
DPC-22-K3	Disposable funnel	**18.13**
DPC-8-K2	Cleaning Bottle	**16.17**
DPC-60-K10	9oz. Measuring Guide (10 Pack)	**19.98**
DPC-62-K10	Measuring guide 2:1 & 3:1	**18.23**
DPC-63-K10	Measuring guide 4:1 & 5:1	**18.23**

ANTI-STATIC WIPE

Single-use treated wipe to eliminate static between refinish coats.



Benefits

- Reduces dirt imperfections on plastic parts caused by static.
- Lint free.
- No VOCs.

Easy To Use

- Simply wipe over the entire panel before spraying.

Innovative

- Improved metallic orientation from reduction of static charges which can cause metallics to orientate incorrectly.

Directions For Use

- NOTE: For best results, the wipe must make contact with entire surface to be sprayed. USE DRY ONLY.
  1) Carefully wipe the entire surface to be sprayed with the DeVilbiss CLEAN™ Anti-Static Wiper.
  2) For best results, use even, firm, overlapping strokes as if you were spraying the surface.



Part Number	Description	Price €
DC-ASW-K12	Box of 12 individually packed Anti-Static Wipers	**37.60**

BUMPER PREP PAD

Single-use pre-saturated scuff pad for new unprimed bumpers & plastic parts.



Benefits

- Reduces steps in bumper preparation processes, increasing efficiency.
- Provides comprehensive abrasion for better paint adhesion.
- Removes water-based and oil-based contaminants.

Easy To Use

- DeVilbiss CLEAN™ Bumper Prep Pad cleans, abrades and degreases in one easy step.
- Simply soak in water to activate the pad and start prepping your bumper.

Innovative

- The Bumper Prep Pad provides a more consistent scratch pattern and greatly improves paint adhesion.
- Additional preparation products may not be needed as the Bumper Prep Pad cleans, abrades, and degreases in one easy step.

Part Number	Description	Price €
DC-BPP-K12	Box of 12 individually packed Bumper Prep Pads	**59.43**

OVERALLS

Benefits

- Built in hood with pull cords.
- Vented under arm and back.
- Front and rear pockets with Velcro fastening.
- Elasticated waistband and cuffs for improved fit and operator comfort.
- Front knee pockets with Velcro fasteners for insertion of kneeling pads.
- Full length zip front fastening.
- Anti Static.
- Lint Free.
- Lightweight and comfortable to wear.
- Reusable.
- Washable.



Part Number	Description	Price €
DC-OV-M	Medium overall	**47.07**
DC-OV-L	Large overall	**47.07**
DC-OV-XL	Extra large overall	**47.07**
DC-OV-XXL	Extra extra large overall	**47.07**

BOOTH WALL COAT

Spray-on and peelable protective coating for booth walls and doors.

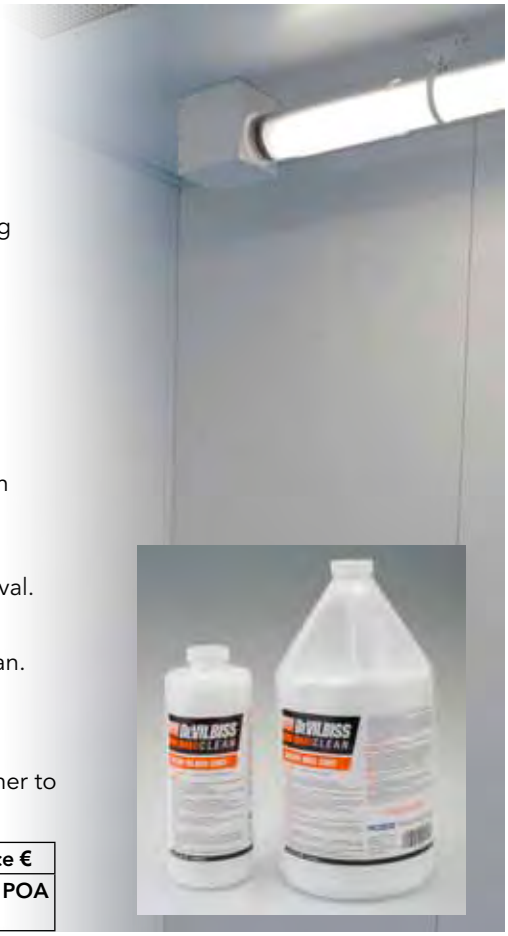

Benefits

- The bright, white sprayable coating protects booth walls from overspray, helping to ensure clean, inclusion free paint jobs.
- Booth Wall Coat will last up to 6 months (maximum 500 bake cycles) before requiring removal and reapplication.
- Non sticky, will not shrink and doesn't crack.

Easy To Use

- Booth walls don't have to be clean, just dry and clear of any washable coatings.
- Quick and easy to apply with a 1.8mm or larger gravity feed spray gun or 1.5mm or larger pressure feed gun.
- Masking is unnecessary if using Clear Glass Coat. Simply trim out the peelable Booth Coat from windows with a blade and spray Clear Glass Coat over.

Innovative

- Booth Wall Coat can be peeled off quickly and easily in large strips for ease of removal.
- Thanks to its water-based formulation, the spray gun can be cleaned in warm water.
- Booth Wall Coat is easy to touch up periodically to help keep the booth looking clean.

Maintaining a clean spray booth is vital to help ensure clean, inclusion free paint jobs, reducing or even eliminating the time and product wasted on paintwork rectification.

A clean, bright spray booth provides the perfect environment for the professional refinisher to achieve perfect blends and finishes.

Part Number	Description	Price €
DC-BWC-K	Complete kit to spray entire booth including windows. 4 x bottles of Booth Wall Coat (3.78 litres each) , 1 x bottle of Clear Glass Coat (0.94 litres)	POA

CLEAR GLASS COAT

Spray-on and truly peelable protective coating for glass surfaces.

Benefits

- The clear sprayable coating protects indoor glass surfaces from overspray, helping to ensure clean, inclusion free paint jobs.
- Clear Glass Coat will last up to 12 months (maximum 500 bake cycles) before requiring removal and reapplication.
- Non sticky, will not shrink and doesn't crack.

Easy To Use

- Booth glass should be clean, dry and clear of any washable coatings.
- Ensure the booth air is on. An ambient temperature of 20 - 25°C is ideal.
- Quick and easy to apply. Just one medium, wet coat will provide an acceptable coating. A thicker coat will make removal even easier.

Innovative

- Clear Glass Coat can be peeled off in large strips for ease of removal.
- Thanks to its water-based formulation, the spray gun can be cleaned in warm water.

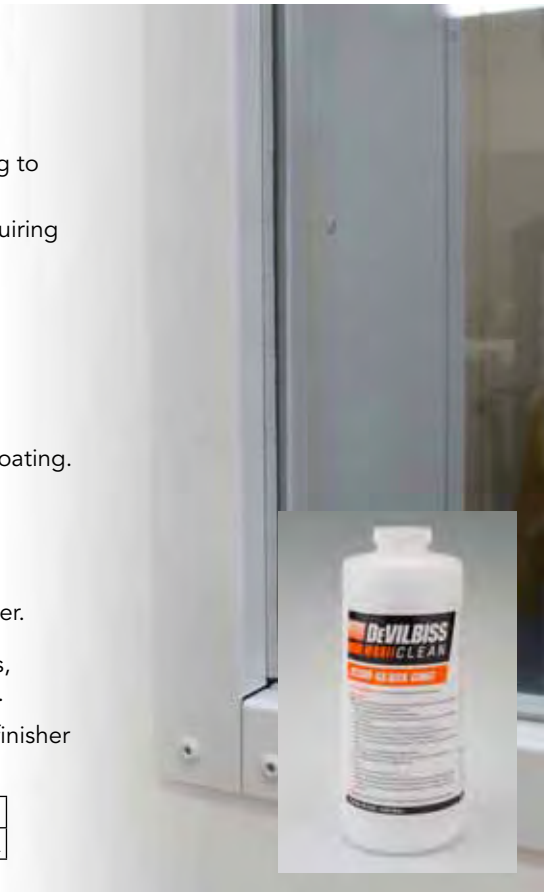

Maintaining a clean spray booth is vital to help ensure clean, inclusion free paint jobs, reducing or even eliminating the time and product wasted on paintwork rectification.

A clean, bright spray booth provides the perfect environment for the professional refinisher to achieve perfect blends and finishes.

Part Number	Description	Price €
DC-CGC-K6	Kit of 6 x bottles of Clear Glass Coat (0.94 litres each)	POA

COMPLETE AIR FED FULL FACE RESPIRATORY PROTECTION



- **Gun supply hose swivels both radially and laterally, ensuring better spray dynamics without the hose restricting the movement of the sprayer.**
- **Left or right sided waist belt fitment without having to change the air fitting configuration.**
- **The Pro Visor disperses breathing air gently around the lightweight visor at a positive pressure with no misting or discomfort, ensuring every sprayer can work at their best.**
- **The wrap around visor provides excellent and much wider peripheral vision than sprayers will be used to, while the removable peak can help reduce glare from spray booth lighting.**
- **A whistle is incorporated to warn the operator that an insufficient quantity of breathing air is being supplied to the Pro Visor.**



Specification

Protection:	APF = 40 / NPF = 200
Carbon Filter Life:	3 months
Supply Pressure:	4.0 bar (60 psi) minimum to 7.0 bar (100 psi) maximum
Air Flow Rate:	160 - 220 l/min (5.7 - 7.8 SCFM)
Noise level @ 220 l/min:	80 db(A)
Approvals:	PPE directive 89/686/EEC. Conforms to EN 14594:2005 Class 3A
Zone Classifications:	Suitable for use in Zones 1 and 2 Hazardous Areas (gas groups IIA)

Pro Visor Outfit

PROV-650	Complete air fed visor outfit with waistbelt	**517.06**

Accessories

Part No	Description	Price €
PROV-37-K	Belt & regulator	**260.59**
PROV-21-K	Peak	**20.81**
PROV-36-K10	Peel off visors pack of 10	**22.45**
PROV-36-K50	Peel off visors pack of 50	**87.24**
PROV-51-K	Belt and buckle assembly	**53.56**
PROV-38-K	Rigid Acetate visor, face seal and breathing air tube	**142.14**
PROV-26-K	Storage bag	**26.68**
PROV-27-K4	Filter element (pack of 4)	**106.09**
PROV-52-K2	Lint-free brow band (pack of 2)	**31.62**
PROV-41-K	Visor head piece & breathing air tube	**334.75**
PROV-30-K	Spacer, stud & knob (set of all sizes)	**35.43**
PROV-31-K	Filter cap & seal	**26.68**
PROV-32-K	Y-piece assembly	**80.24**
PROV-42-K	QD connector	**42.64**
PROV-406-K	Gun hose (1.2 m)	**90.13**
H-6085-QD	10 metre length air-hose complete with male and female QD's	**139.05**
H-6065	10 metre length air hose complete with re-usable fittings.	**74.06**
MPV-424	Female self-sealing, QD air line fitting	**51.29**
MPV-10	Male-stem, QD air line fitting with 1/4" BSP (M)	**12.77**
MPV-5	Male-stem, QD air line fitting with 1/4" BSP (F)	**11.12**
MPV-462	Female self-sealing QD fitting with 1/4" BSP (F)	**29.97**
MPV-463	Kit of 4 QD's fittings (2 male and 2 females)	**106.09**


MPV-463


PROV-21-K


PROV-27-K4


PROV-36-K10


MPV-60-K3

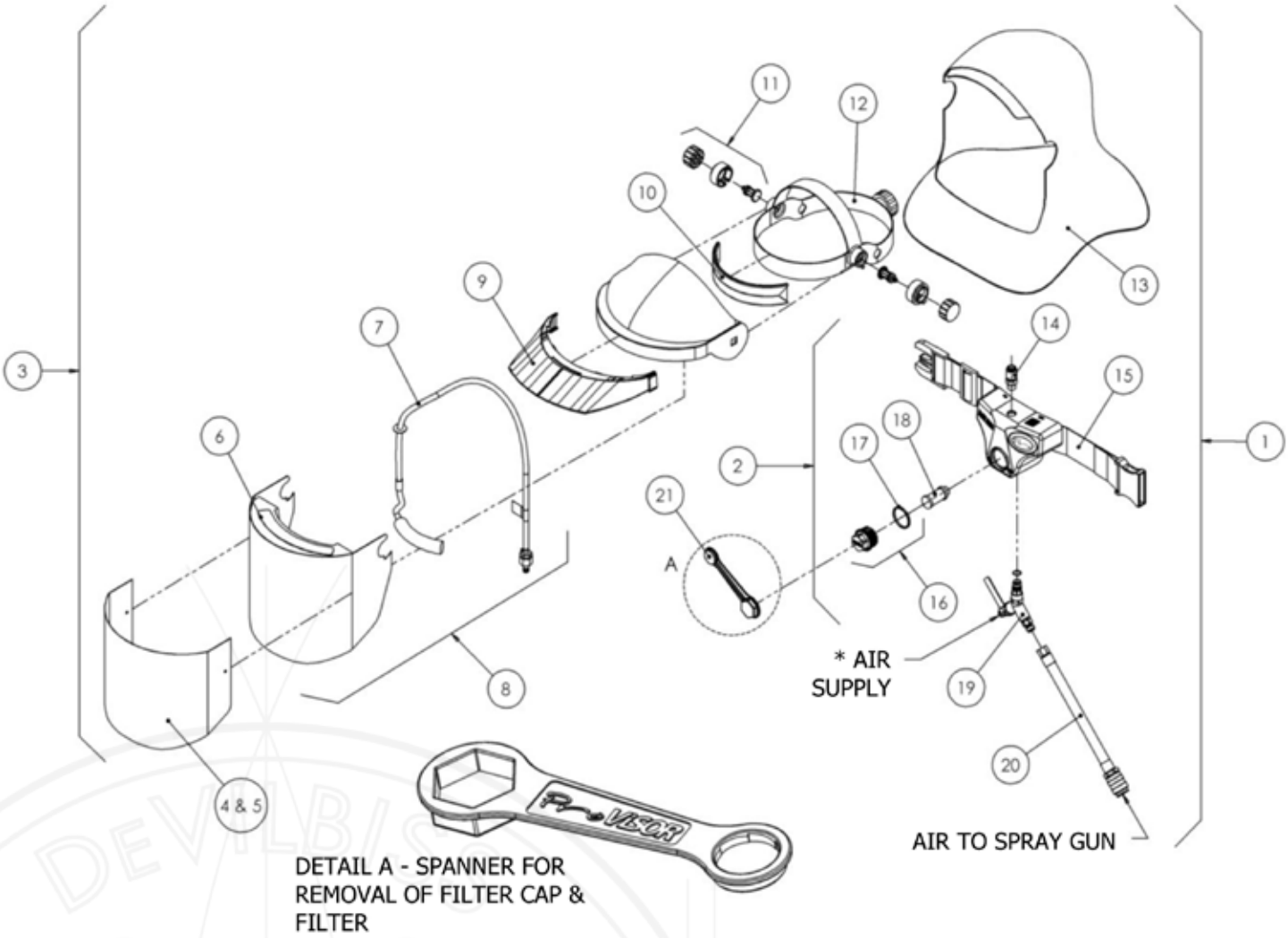

DETAIL A - SPANNER FOR REMOVAL OF FILTER CAP & FILTER

Ref No	Description	Part Number	Price €
1	Pro-Visor Complete Unit	PROV-650	**517.06**
2	Belt And Regulator	PROV-37-K	**260.59**
3	Visor Head Piece & Breathing Air Tube	PROV-41-K	**334.75**
4	Tear-Off Visors Pack of 10	PROV-36-K10	**22.45**
5	Tear-Off Visors Pack of 50	PROV-36-K50	**87.24**
6	Rigid Acetate Visor & Face Seal	PROV-17-K	**117.42**
7	Breathing Air Tube Complete	PROV-24-K	**61.49**
8	Rigid Acetate Visor, Face Seal And Breathing Air Tube	PROV-38-K	**142.14**
9	Peak	PROV-21-K	**20.81**
10	Lint Free Brow Band (Pack of 2)	PROV-52-K2	**31.62**
11	Spacer, Stud & Knob (Set of All Sizes)	PROV-30-K	**35.43**
12	Adjustable Headpiece	PROV-40-K	**50.47**
13	Hood	PROV-39-K	**98.78**

Ref No	Description	Part Number	Price €
14	QD Connector	PROV-42-K	**42.64**
15	Belt and Buckle	PROV-51-K	**53.56**
16	Filter Cap & Seal	PROV-31-K	**26.68**
17	Filter Cap Seal (Pack of 4)	PROV-34-K4	**24.93**
18	Filter Element (Pack of 4)	PROV-27-K4	**106.09**
19	Y-Piece Assembly	PROV-32-K	**80.24**
20	1.2m Hose (To Spray Gun)	PROV-406-K	**90.13**
21	Spanner for Filter & Cap	SPN-12-K	**13.70**
22	Storage Bag (not shown)	PROV-26-K	**26.68**
Hoses			
	10M Air Hose - 5/16"ID Male & Female QD's	H-6085-QD	**139.05**
	10M Air Hose - 5/16"ID, ¼" BSP G Swivel F Connectors	H-6065	**74.06**

"VALUAIR" HALF-MASK RESPIRATOR



- **Lightweight, soft, pliable facepiece.**
- **Easy bayonet fitting filter cartridges.**
- **Comfortable elasticated / moulded headstrap cradle.**
- **Replaceable A2 specification cartridges supplied as standard.**
- **Pre filters to extend the service life of the main filter cartridges.**

Specification – A2 Filters

A2 filters are for use against organic vapours with boiling points above 650°C.

The Valuair mask with A2 filter cartridges can therefore be used in areas of contamination up to 10 x the Occupational Exposure levels set by the Health and Safety Executive.

Suitable for use with cellulose paints, primers, lacquers and varnishes but not suitable for use with Isocyanates.

Assigned Protection Factor of 10.

Part No	Description	Price €
MPV-629	Valuair Cartridge Mask complete with A2 Filter cartridges and pre-filters	**POA**
MPV-492	Pair of pre-filter covers plus ten filter pads	**POA**
MPV-494-K2	Pack of two A2 specification filter cartridges	**POA**
MPV-4006	One piece protective goggles for use with half masks	**35.74**

"FREEDOM" HALF-MASK RESPIRATOR



- **Lightweight, dual filter, semi-disposable half mask respirator.**
- **Can be used up to a maximum of 28 days.**
- **Maintenance free and requires no spare parts.**
- **Low nose bridge helps to accommodate goggles for optimum vision.**
- **Headstrap has no buckles or fasteners and is comfortable and easy to use.**

Specification – A2 Filters

A2 filters are for use against organic vapours with boiling points above 650°C.

The Freedom mask with A2 filter cartridges can therefore be used in areas of contamination up to 10 x the Occupational Exposure levels set by the Health and Safety Executive.

Suitable for use with cellulose paints, primers, lacquers and varnishes but not suitable for use with Isocyanates.

Assigned Protection Factor of 10.

Part No	Description	Price €
MPV-496	Freedom Cartridge Mask complete with A2 Filter cartridges	**63.65**
MPV-4006	One piece protective goggles for use with half masks	**35.74**

PRO AIR-1 FILTER REGULATOR



- **Rolling diaphragm gives rapid response and sensitive air pressure control.**
- **Provides air filtered to 5 microns.**
- **Maximum airflow 3500 l/min (124 cfm).**
- **Two ball valve controlled outlets.**
- **Tamperproof, removable and lockable air pressure control knobs.**

Specification

Air Inlet Thread	1/2" BSP female
Regulated Outlets	2 Valved
Unregulated Outlets	N/A
Air Outlets (Ball Valves)	1/ 4" BSP (M)
Width (Overall)	185mm (7.2")
Height (Overall)	280mm (11")
Weight	2300 gms (81oz)
Capacity (maximum air flow)	3500 l/min (124 cfm)
Maximum Air Inlet Pressure	13 bar (189 psi)
Maximum Regulated Outlet Pressure	0-8 bar (0-116 psi)
Maximum Operating Temperature	80°C (176°F)
Pressure Gauge	0-11 bar (0-160 psi)
Gauge port	1/8" BSP (F)
Degree of Filtration (Output air quality class ISO8573-1)	3.7.4 (Down to 5 microns)
Drain Valve	Semi-Automatic
Maximum Pressure Drop	5% of Inlet Pressure

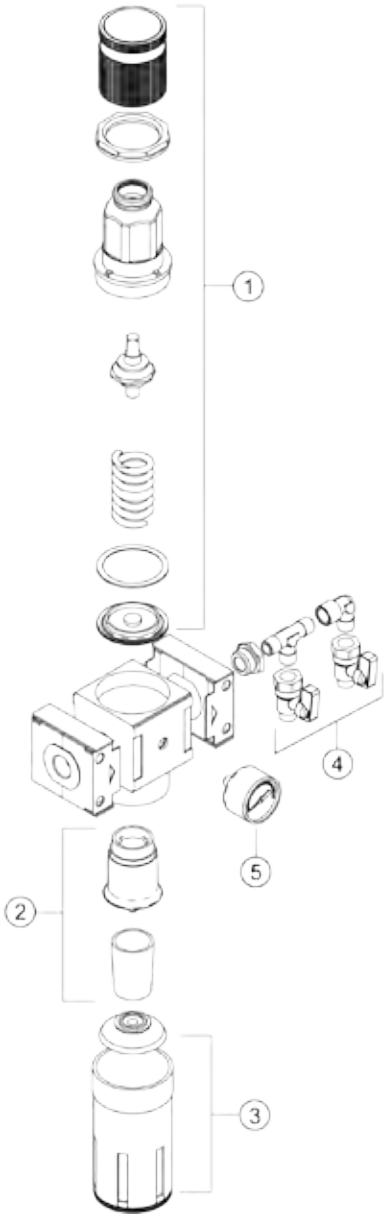

Pro Air-1 Regulator

Part No	Description	Price €
PROAIR-1	2 Outlet Filter Regulator	**290.46**
DV-9420601	Filter bowl removal tool	**29.97**

Ref No	Description	Part Number	Price €
1	Upper Cover Assembly	PROAIR-71	**67.26**
2	Filter (Air)	PROAIR-51	**44.81**
3	Metal Filter Bowl	PROAIR-72	**67.26**
4	Ball Valve	SER-3414-MF	**19.06**
5	Pressure Gauge	GA-319	**44.29**

PRO AIR-2 FILTER REGULATOR COALESCER



- **High air flows for conventional and compliant spray guns.**
- **Provides air filtered to 0.01 microns suitable for air-fed respiratory outfits.**
- **Maximum airflow of 900 l/min (32 cfm).**
- **Two ball valve controlled outlets.**
- **Rolling diaphragm gives rapid response and sensitive air pressure control.**

Specification

Air Inlet Thread	1/2" BSP female
Regulated Outlets	2 Valved
Unregulated Outlets	N/A
Air Outlets (Ball Valves)	1/ 4" BSP (M)
Width (Overall)	330mm (12.9")
Height (Overall)	280mm (11")
Weight	3375 gms (119 oz)
Capacity (maximum air flow)	900 l/min (32 cfm)
Maximum Air Inlet Pressure	13 bar (189 psi)
Maximum Regulated Outlet Pressure	0-8 bar (0-116 psi)
Maximum Operating Temperature	80°C (176°F)
Pressure Gauge	0-11 bar (0-160 psi)
Gauge port	1/8" BSP (F)
Degree of Filtration (Output air quality class ISO8573-1)	1.7.2 (Down to 0.01 microns *)
Drain Valve	Semi-Automatic
Maximum Pressure Drop	10% of Inlet Pressure

* Suitable for Breathing Air

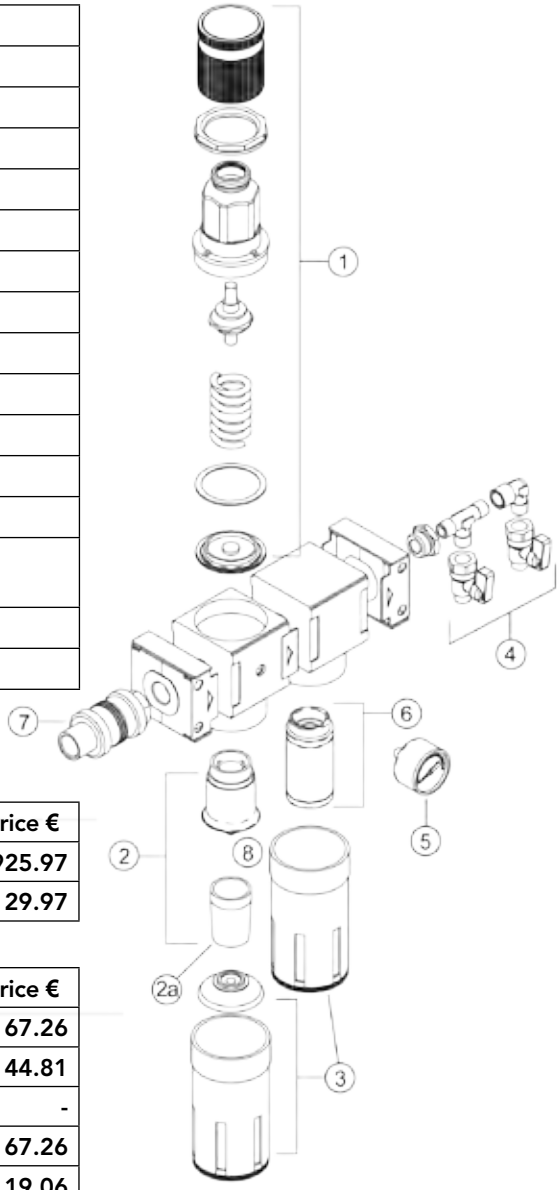

Pro Air-2 Regulator

Part No	Description	Price €
PROAIR-2	2 Outlet Filter Regulator Coalescer	**925.97**
DV-9420601	Filter bowl removal tool	**29.97**

Ref No	Description	Part Number	Price €
1	Upper Cover Assembly	PROAIR-71	**67.26**
2	Filter (Air)	PROAIR-51	**44.81**
2a	Filter Element Only	-	**-**
3	Metal Filter Bowl	PROAIR-72	**67.26**
4	Ball Valve	SER-3414-MF	**19.06**
5	Pressure Gauge	GA-319	**44.29**
6	Fine Filter (Oil)	PROAIR-52	**180.25**
7	Isolation Valve	DV-8000035	**72.62**
8	Filter Kit (Includes Items 2, 6)	PROAIR-62	**213.21**

PRO AIR-3 FILTER REGULATOR COALESCER WITH ACTIVATED CARBON FILTER



- **For conventional and compliant spray guns.**
- **Provides air filtered to 0.01 microns suitable for air-fed respiratory outfits.**
- **Activated carbon filter removes oil carry over to 0.003 microns.**
- **Maximum airflow of 900 l/min (32 cfm).**
- **Two ball valve controlled outlets.**
- **Rolling diaphragm gives rapid response and sensitive air pressure control.**

Specification

Air Inlet Thread	1/2" BSP female
Regulated Outlets	2 Valved
Unregulated Outlets	N/A
Air Outlets (Ball Valves)	1/ 4" BSP (M)
Width (Overall)	395mm (15.5")
Height (Overall)	280mm (11")
Weight	4205 gms (165 oz)
Capacity (maximum air flow)	900 l/min (32 cfm)
Maximum Air Inlet Pressure	13 bar (189 psi)
Maximum Regulated Outlet Pressure	0-8 bar (0-116 psi)
Maximum Operating Temperature	80°C (176°F)
Pressure Gauge	0-11 bar (0-160 psi)
Gauge port	1/8" BSP (F)
Degree of Filtration (Output air quality class ISO8573-1)	1.7.1 (Down to 0.003 microns *)
Drain Valve	Semi-Automatic
Maximum Pressure Drop	10% of Inlet Pressure

* Suitable for Breathing Air

Pro Air-3 Regulator

Part No	Description	Price €
PROAIR-3	2 Outlet Filter Regulator Coalescer with activated carbon filter	**1,027.94**
DV-9420601	Filter bowl removal tool	**29.97**

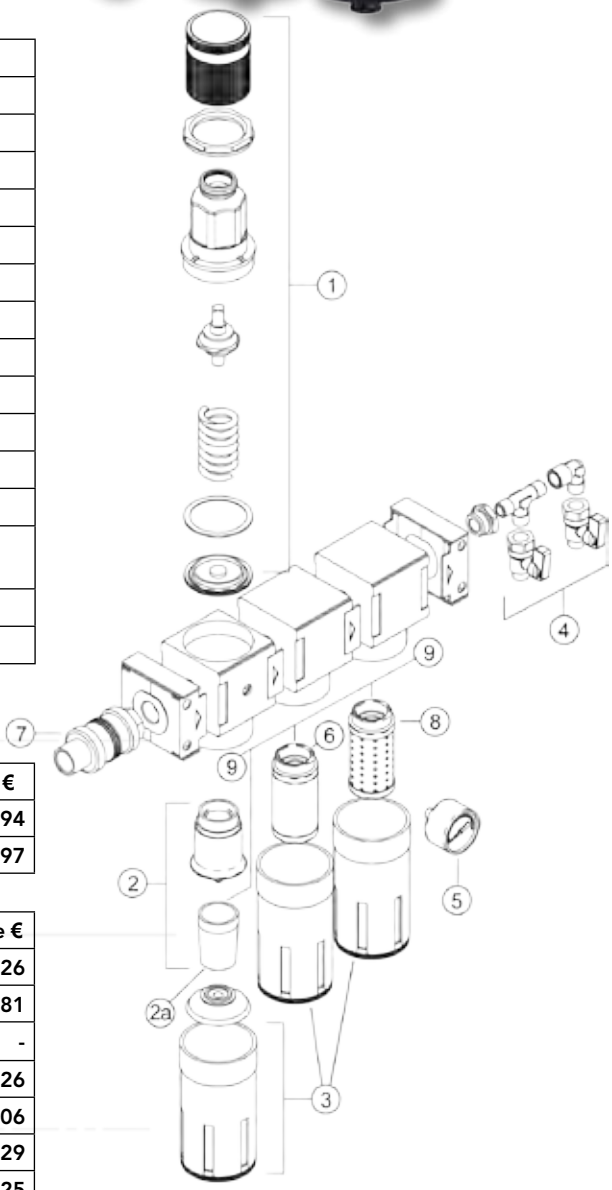

Ref No	Description	Part Number	Price €
1	Upper Cover Assembly	PROAIR-71	**67.26**
2	Filter (Air)	PROAIR-51	**44.81**
2a	Filter Element Only	-	**-**
3	Metal Filter Bowl	PROAIR-72	**67.26**
4	Ball Valve	SER-3414-MF	**19.06**
5	Pressure Gauge	GA-319	**44.29**
6	Fine Filter (Oil)	PROAIR-52	**180.25**
7	Isolation Valve	DV-8000035	**72.62**
8	Activated Carbon Filter	PROAIR-53	**180.25**
9	Filter Kit (Includes Items 2, 6, 8)	PROAIR-63	**358.44**

PRO AIR-4 FILTER REGULATOR COALESCER



- **For conventional and compliant spray guns.**
- **Provides air filtration to a particle size of 5 microns.**
- **The unit has a generous capacity of 90 cfm.**

Specification

Air Inlet Thread	1/2" BSP female
Regulated Outlets	2 Valved + 1 Plugged
Unregulated Outlets	1 Valved + 1 Plugged
Air Outlets (Ball Valves)	1/ 4" BSP (M)
Width (Overall)	290mm (11.5")
Height (Overall)	280mm (11")
Weight	2950 gms (104 oz)
Capacity (maximum air flow)	2550 l/min (90 cfm)
Maximum Air Inlet Pressure	13 bar (189 psi)
Maximum Regulated Outlet Pressure	0-8 bar (0-116 psi)
Maximum Operating Temperature	80°C (176°F)
Pressure Gauge	0-11 bar (0-160 psi)
Gauge port	1/8" BSP (F)
Air Filtration	Down to 5 microns
Drain Valve	Semi-Automatic
Maximum Pressure Drop	5% of Inlet Pressure

NB: Not suitable for use in low bake spray booths.

Pro Air-4 Regulator

Part No	Description	Price €
PROAIR-4	3 Outlet Filter Regulator Coalescer (1 filtered, 2 filter regulated)	**POA**
DV-9420601	Filter bowl removal tool	**29.97**

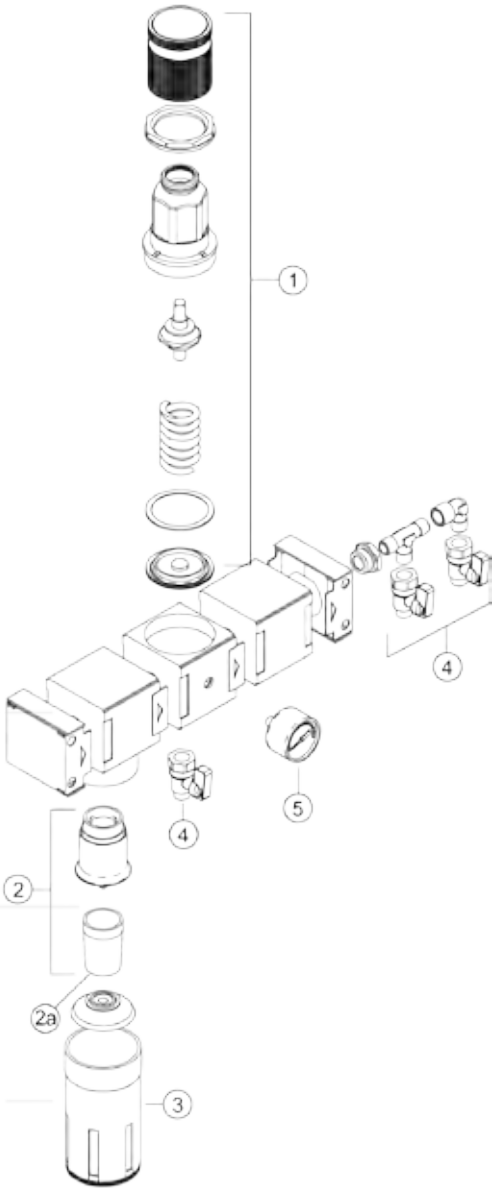

Ref No	Description	Part Number	Price €
1	Upper Cover Assembly	PROAIR-71	**67.26**
2	Filter (Air)	PROAIR-51	**44.81**
2a	Filter Element Only	-	**-**
3	Metal Filter Bowl	PROAIR-72	**67.26**
4	Ball Valve	SER-3414-MF	**19.06**
5	Pressure Gauge	GA-319	**44.29**

Please Note: Economy Regulators are not suitable for low bake temperatures.

ECONOMY FILTER REGULATORS AND COALESCERS


FLFR-1

FLFR-1 Filter Regulator

- Air filtration down to 20 microns.
- High quality manufacture.
- Air flow of 70cfm (at 7 bar – 100 psi inlet pressure).
- Lockable and removable (tamperproof) control.

FLCF-1 Coalescing Filter

- A 3/8" (port size) coalescing (fine oil) filter.
- Air filtration down to 0.01 microns.
- Replaceable filter element.
- Maximum working pressure 18 bar (260 psi).


FLCF-1


FLRC-1

FLRC-1 – Filter Regulator Coalescer

- Compact, low cost single operator Filter Regulator and Coalescer.
- Filtration down to 0.01 microns suitable for air mask or visor.


FLRCAC-1

FLRCAC-1 Filter Regulator Coalescer with Activated Carbon Filter

- High efficiency filter designed to remove dirt, liquid oil and water from spraying and breathing air.
- Filtration down to 0.01 microns plus activated carbon filter removing contaminants down to 0.003 microns.

Regulator Assemblies

Part No.	Description	Price €
FLFR-1	Single outlet Filter Regulator (70cfm)	**254.41**
FLCF-1	Coalescing (fine oil) filter (25cfm)	**213.21**
FLRC-1	Single outlet Filter Regulator Coalescer	**441.87**
FLRCAC-1	Single outlet filter regulator coalescer with activated carbon filter	**531.48**
XA-12	Replacement coalescing filter element (FLRC + FLRCAC)	**180.25**

Part No.	Description	Price €
AC-12	Replacement activated carbon filter (FLRCAC)	**180.25**
9450802	Upper Cover (All)	**64.00**
9450301	Metal Bowl (All)	**47.00**
GA-319	Gauge (FLFR+ FLRC+ FLRCAC)	**44.29**
9450102	Replacement filter element (FLFR, FLRC, FLRCAC)	**35.70**

GRAVITY AND SUCTION CUP ACCESSORIES



Gravity Feed Cups

Part No	Description	Price €
GFC-501	568ml (1 Pint) Acetal gravity cup for GTi Pro, GTi Pro LITE, GFG & GPi	**43.78**
GFC-502	Gravity Cup Aluminium 1l	**72.00**
KGP-509-1	284ml (1/2 Pint) Nylon gravity cup for GFG	**53.77**
SRi-510	125ml Acetal gravity cup for SRi Pro LITE	**43.78**
GFC-515	568ml (1 pint) black UV gravity cup. Compatible with DV1	**57.37**
SRi-42-K3	Pack of 3 cone filters	**20.81**
GFC-402	Lid assembly for GFC-501 gravity cup	**3.40**
KGP-401	Lid assembly for KGP-509 gravity cup	**25.65**
GFC-17-K5	Washer	**0.82**
GFC-2-K5	Pack of 5 drip check lids	**4.43**
KGP-5-K5	Pack of 5 gravity cup strainers for GFC-501 & KGP-509	**7.11**
SRi-8-K6	Pack of 6 lids for SRi gravity cups	**13.60**
KR-459-K5	Mini cups	**42.95**
GFC-404-K2	Disposable Lid Kit (GFC-502)	**37.29**
SLG-450	Gravity Cup for SLG-610/620	**26.99**



Suction Feed Cups

Part No	Description	Price €
KR-566-1-B	1 litre standard suction cup and lid assembly for JGA	**109.18**
KR-466-K	Cup only – 1 litre suction cup	**58.30**
KR-4001-B	Suction cup lid assembly for JGA cups	**74.06**
KR-115-K5	Pack of 5 drip free diaphragms	**8.14**
KR-11-K3	Pack of 3 Tri-Seal gaskets for KR suction cups	**6.49**
KR-69-K3	Pack of 3 Leather gaskets for suction cups	**14.94**
KR-483-K10	Kit of 10 mesh KR cup strainers – to fit 7/16" tube, 115 Micron	**39.86**
KR-484-K10	Kit of 10 mesh KR cup strainers – to fit 7/16" tube, 350 Micron	**39.86**
KR-110-K3	Kit of 3 Spot Pots	**31.00**

HOSE & FITTINGS

- **High Flow Air Hose with Connections.**
- **High air flow, high quality rubber air hose.**
- **8mm (5/16") bore ideal for use with conventional, compliant / HVLP spray guns, air fed breathing equipment and other air tools.**



Option 1
10 metre length air hose complete with quality chrome replaceable 1/4" swivel nut female fittings either end.
Part No: H-6065 €74.06



Option 2
10 metre length air hose complete with crimped female quick detach connection at one end and crimped male QD fitting at the other end.
Part No: H-6085-QD €139.05



Option 3
10 metre length air hose complete with crimped female quick detach connection at one end and crimped female loose nut fitting at the other end.
Part No: H-6086 €131.84

High Flow Air Hose Assemblies

Red rubber air hose assemblies including 1/4" BSP connections



Part No	Description	Price €
H-7501HA-1.2	1.2 metre, 5/16"ID Air Hose Assembly – For KBII	33.06
H-7501HA-5	5 metre, 5/16"ID Air Hose Assembly	67.26
H-7501HA-7.5	7.5 metre - 5/16"ID Air Hose Assembly	87.34

Part No	Description	Price €
H-7501HA-10	10 metre - 5/16"ID Air Hose Assembly	110.21
H-7501HA-15	15 metre - 5/16"ID Air Hose Assembly	149.35
H-7502HA-7.5	7.5 metre - 3/8"ID Air Hose Assembly	87.34
H-7502HA-10	10 metre - 3/8"ID Air Hose Assembly	110.21
H-7502HA-15	15 metre - 3/8" ID Air Hose Assembly	149.35

Air Hose Connections
Part No: P-HC-4527 1/4" BSP Female (8mm (5/16") hose bore) **€11.54**
Part No: P-HC-4528 1/4" BSP Female (9.5mm (3/8") hose bore) **€11.54**

Fluid Hose Assemblies

Black rubber fluid hose assemblies including 3/8" BSP connections



Part No	Description	Price €
H-7503HA-1.45	1.45 metre 1/4" ID Fluid Hose Assembly – For KBII	44.08
H-7503HA-5	5 metre 1/4" ID Fluid Hose Assembly	77.25
H-7503HA-7.5	7.5 metre 1/4" ID Fluid Hose Assembly	99.91

Part No	Description	Price €
H-7503HA-10	10 metre 1/4" ID Fluid Hose Assembly	126.69
H-7503HA-15	15 metre 1/4" ID Fluid Hose Assembly	174.07
H-7504HA-5	5 metre 3/8" ID Fluid Hose Assembly	79.72
H-7504HA-10	10 metre 3/8" ID Fluid Hose Assembly	129.78
H-7504HA-15	15 metre 3/8" ID Fluid Hose Assembly	178.19

Fluid Hose Connections
Part No: P-HC-4543 3/8" BSP Female (6mm (1/4") hose bore) **€15.86**
Part No: P-HC-4548 3/8" BSP Female (9.5mm (3/8") hose bore) **€15.86**

Quick detach fittings

- **High flow connections – minimal pressure drops**
- **Ideal for spray guns, respirators, hoses and regulators**

MPV-5 – Male quick detach stem with 1/4" female fitting: **€11.12**
MPV-424 – Female quick detach connection with 1/4" male fitting: **€51.29**
MPV-10 – Male quick detach stem with 1/4" male fitting: **€12.77**
MPV-462 – Female quick detach with 1/4" female fitting: **€29.97**
MPV-463 – Economy pack, includes 1 of each shown in the picture to the right: **€106.09**
MPV-60-K3 – Male quick detach Uni Swivel stem with 1/4" female fitting: **€92.29**





In-Line Air Filters

- Lightweight, gun mounting air filter
- High efficiency action traps water, oil and dirt
- Tough solvent resistant acetal housing with 1/4" threads

Part No: HAF-507 €15.45

In-Line Air Adjusting Valve

- Fits neatly in-line at the gun air inlet
- Increase or decrease working pressure at the gun
- Calibrated up to 11 Bar (160 psi)

Part No: HAV-501-B €58.71





Gun Cleaning Brushes

- Ideal for a variety of gun cleaning jobs
- Tough resilient bristles for useful service
- Suitable size for cleaning most parts of the gun

Part No: 4900-5-1-K3 Pack of 3 brushes €12.36

Viscosity Cups

- The fast, simple way to check out paint viscosity
- Tough durable and easy to clean
- Precision metal drain out insert

Part No: 7000-114-K2 Pack of 2 viscosity cups €20.81





Mixing Cups

- Easy to use, disposable mixing cups
- Made from solvent resistant clear polypropylene
- Calibrated with a 0-600 volumetric measurement scale

Part No: MC-1-K50 Pack of 50 cups €25.65 **Part No: MC-2-K50 Pack of 50 lids €17.61**
Part No: MC-1-K1000 Pack of 1000 cups €324.45 **Part No: MC-2-K1000 Pack of 1000 lids €189.52**

Trigger Clip

- Made from solvent resistant acetal
- Locks trigger in open position for gun wash machine
- Snaps in place for secure fit

Part No: PRO-15-K3 €10.61





Professional Spray Gun Cleaning Kit

- Handy tool wrap style kit of purpose made cleaning brushes and tools
- Includes cleaning instructions and spray gun oil
- Keeps your spray guns in top working order

Part No: KK-4584 €67.26

Spray Gun Service Kit

- Spray gun service/repair kit for GTIPRO and SRIPRO

Part Nos: PRO-415-1 – Service kit €33.99





DGi PRO pod

- Perfectly positioned for easy checking
- Accurate digital "bar" read-out of working pressure
- Accurate readings to within 0.05 bar (0.7 psi)

Part No: 704426 (for DV1) **€184.16**
Part No: DGIPRO-504-BAR-K (for GTi Pro and GTi Pro LITE) **€202.91**
Part No: DGIPRO-503-BAR-K (for Pre-2016 GTi Pro LITE) **€202.91**





Gravity Gun Stands

- Stable metal workbench gun stands
- Choice of 2 stands for 3 gravity guns or a single gun
- Single gun stand is ideal for SRi guns and full size guns

Part Nos: GGS-1 – 3 gun stand **€102.69**
GFV-50-F – single gun stand **€55.93**

Gravity Cup Filters

- Effectively removes dirt, flakes and scum
- Keeps the finish blemish free
- Resistant to most solvents – easily cleaned

Part No: KGP-5-K5 - Pack of five filters **€7.11**





Suction Cup Filters

- Convenient, easy fit suction cup paint filters
- Keeps spray gun passages clear
- Removes dirt, flakes and scum

Part Nos: KR-484-K10 51 mesh filter screen (general purpose) **€39.86**
KR-483-K10 130 mesh filter screen (finer filtration) **€39.86**

Suction Cup Lid Gaskets

- Ready to use, purpose fit suction cup lid seals
- Choose between Tri-Seal or traditional leather gaskets
- Fits all DeVilbiss KR type suction cups

Part Nos: KR-11-K3 Tri-seal gaskets **€6.49**
KR-69-K3 Leather gaskets **€14.94**





Drip-Free Diaphragms

- Prevents suction cup leaks and vent hole blockages
- Allows the cup to be used at angles
- Fits snugly under the cup lid

Part No: KR-115-K5 (Pack of 5) **€8.14**

Spot Pots

- 0.5 litre capacity nylon cup insert cuts down on costly paint mixes
- Tapered base ensures that minimal quantities of paint can be utilised
- Quickly and easily cleaned for frequent colour changes
- Fits all 1 litre capacity KR type suction cups

Part No: KR-110-K3 **€31.00**





Gun Lube

- Pack of 10 gun lube sachets.

Part No: GL-1-K10 **€22.15**

KBII 2.3 LITRE REMOTE CUP

- **2.3 litre capacity – greater area coverage, less refills.**
- **Aluminium or stainless steel options (for waterbase materials).**
- **Familiar gun grip handle plus belt hook for operator convenience.**
- **At-the-job controls with lid mounted pressure gauge.**
- **Available complete with short cup to gun air and fluid hoses**
- **KB disposable liners make cleaning and colour changes fast and simple.**



Specification

Air Inlet and outlet connections threads	1/4" BSP (M)
Fluid outlet connection (to spray gun)	3/8" BSP (M)
Maximum working pressure	2.1 Bar (30 psi)
Maximum air supply pressure	8.6 bar (125 psi)
Height	183 mm
Weight (less hoses)	1.76 kg
Cup Capacity	2.3 litres

Spray Gun Kits for use with KBII

Part No	Description	Price €
PROGTI-PTE**-**BK	GTi Pro Pressure Feed Gun with either TE10, TE20, TE30 or TE40 air cap and either 085, 10, 12 or 14 fluid tip	**POA**
PROLT-PTE**-**BK	GTi Pro LITE Pressure Feed Gun with either TE10, TE20, TE30 or TE40 air cap and either 085, 10, 12 or 14 fluid tip	**POA**
JGAPPRO-**-***	Pressure Feed Gun with either C1, C2 or C3 air cap and either 085 12, 14, 16 or 18 fluid tip	**POA**

Kit contents are spray gun, (suction cup with filter if appropriate), Torx key, brush and multi-fit spanner
** = Air Cap / *** = Fluid Tip

KBII Remote Cup kits

Part No	Description	Price €
KB-522	Aluminium Remote Cup without hoses	**485.13**
KB-522-SS	Stainless Steel Remote Cup without hoses	**922.88**
KB-622	Aluminium Remote Cup complete with air and fluid hoses	**533.54**

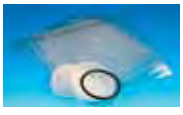

KK-5051

Accessories

Part No	Description	Price €
KB-422	Aluminium 2.3 Litre KBII Spare Cup Only for KB-522	**136.99**
KB-442	Stainless Steel 2.3 Litre KBII Spare Cup Only for KB-522-SS	**153.47**
KK-5051	Kit of 20 disposable liners plus lid diaphragms	**60.87**
H-7501HA-1.2	1.2m Air Hose Assembly with BSP Fittings	**33.06**
H-7503HA-1.45	1.45m Fluid Hose Assembly with BSP Fittings	**44.08**
GA-355	Air Pressure Gauge for KBII - 0-30 psi	**19.47**



KB-422

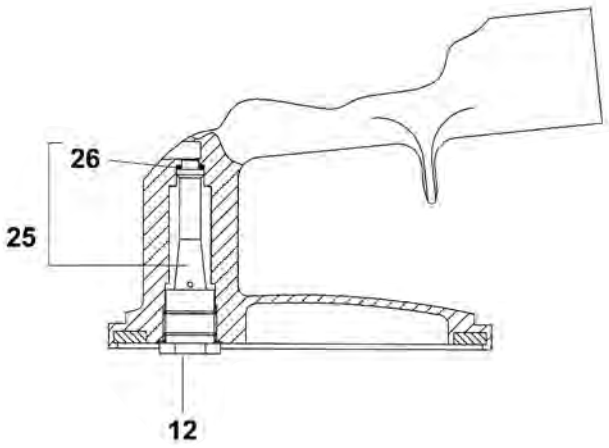

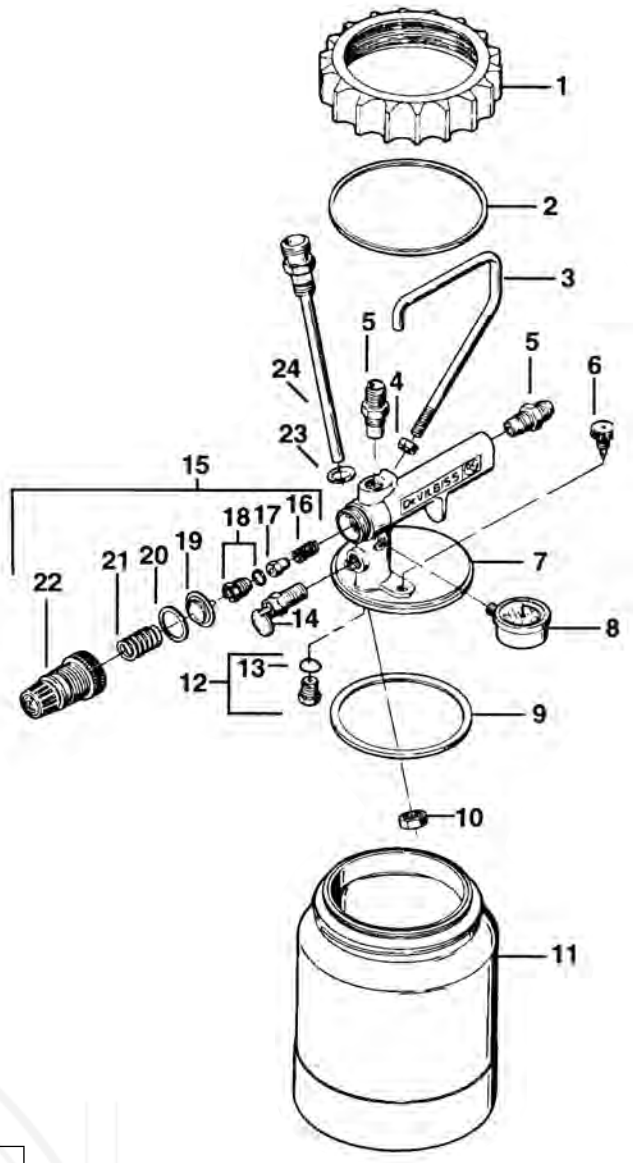

Ref No	Description	Part Number	Price €
1	Retaining Ring	KB-64	**15.86**
2	Slip Rings	KB-81-K5	**17.10**
3	Handle	KB-74	**2.37**
4	CD Nut	-	**-**
5	Connector 1/4" BSP	JGA-158	**12.98**
6	Pressure Relief Valve	KB-66	**12.98**
7	Lid	Not available	**-**
8	Gauge	GA-355	**19.47**
9	Seal	KB-80-K5	**38.83**
10	Locknut (KB-522) kit of 5	MBD-11-K5	**11.95**
11	Cup – Aluminium (KB-522)	KB-422	**136.99**
	Cup – Stainless Steel (KB-522-SS)	KB-442	**153.47**
12	Check Valve kit of 3	KB-432-K3	**35.02**
13	Seal kit of 5	KB-85-K5	**5.15**
14	Safety Valve	TIA-4355	**17.61**
15	Regulator Assembly	KB-428-1	**36.98**
16	Spring	-	**-**

Ref No	Description	Part Number	Price €
17	Valve	-	**-**
18	Valve Seat and Seal	-	**-**
19	Diaphragm	-	**-**
20	Slip Ring	-	**-**
21	Spring	-	**-**
22	Bonnet	-	**-**
23	Seal kit of 6	KB-60-K6	**5.15**
24	Tube Assembly 3/8" BSP (KB-522-B)	KK-4997	**62.52**
	Tube Assembly 3/8" BSP STS (KB-522-SS)	KK-4996	**147.29**
25	Check Valve and Seal Assembly	KB-444	**37.70**
26	Seal kit of 5	KB-101-K5	**40.07**
Hose & Fittings			
	1.2m Air Hose Assembly with BSP Fittings	H-7501HA-1.2	**33.06**
	1.45m Fluid Hose Assembly with BSP Fittings	H-7503HA-1.45	**44.08**

DX PUMPS by BINKS

BINKS DX SERIES: AIR OPERATED 1:1 RATIO DIAPHRAGM PUMPS

- **Acetal pump body with stainless steel balls and soft seats for universal paint compatibility.**
- **The unique diaphragm design and "built in" fluid regulator provide consistent pressure and readily adjustable paint flow.**
- **The Non-stall air valve provides smooth, quiet and surge free paint delivery up to 1000 cc/minute.**
- **Clearly labelled Air regulators provide independent control of pump and spray gun fluid and air pressures.**
- **Quick release air, fluid inlet and outlet connections for faster maintenance.**
- **Re-circulation/dump valve accessory for faster colour changes reducing down time, saving time and money.**
- **Pump outfit mountings include Cart, Wall and Tripod outfits with or without spray guns & hoses.**



Specification

Pump Ratio	1 to 1
Max. Air Pressure	7 Bar / 100 psi
Max. Fluid Pressure	7 Bar / 100 psi
Nominal Flow Volume / Cycle	0.07 Litres (0.018 US Gall)
Fluid Output @ 60 cycles/min	4.2 Litres / min (1.1 US Gall / min)
Max Recommended Continuous Cycle Rate	10 Cycles /min
Max Recommended Intermittent Cycle Rate	30 Cycles /min
Inlet Fluid Connection	3/8" Universal (BSPP/NPSM) Male or Female
Outlet Fluid Connection	3/8" Universal (BSPP/NPSM) Male or Female
Maximum Dry/Wet Lift	6.6m (21.8 feet)
Air Inlet	G1/4" (BSPP) Female
Fluid Regulator Pilot	Ø4 Tube
Air Volume / cycle @ 6.9Bar/100 psi	0.77L (0.027SCFM)
Air Flow @ 10 cycles/min 6.9 bar/100 psi	7.7L/min (0.27SCFM/min)
Air Flow @ 30 cycles/min 6.9 bar/100 psi	23.2L/min (0.82SCFM/min)
Air Quality ISO 8573.1 Class 3.3.2 #	Dirt 5 microns
	Water -20°C @ 7bar (940ppm)
	Oil 0.1mg/m3
	Non Lubricated
Noise Level	68db LAeq
Earth (Air Inlet Cover)	<1Ω
Weight – Bare Pump	2.2 Kg (4.9 lbs)





Spray Gun Kits for use with the DX Pump:

Part No	Description	Price €
PROLT-PTE**-**BK	PROLT-PTE**-**BK GTi Pro LITE Pressure Feed Gun with either TE10, TE20, TE30 or TE40 air cap and either 085, 10, 12 or 14 fluid tip	**POA**

DX Pump Outfits:

Part No	Description	Price €
DX70R3-CF2	Cart mounted pump outfit with filter and three air controls	**1528.52**
DX70R3-TF2	Tripod mounted pump outfit with paint filter and three air controls	**1168.02**
DX70R3-WF2	Wall mounted pump with paint filter and three air controls	**1216.43**

Ref. No	Description	Part No.	Price €
1	Check valve seal kit x4	DXK-1	**38.83**
2	Check valve kit x4	DXK-2	**58.20**
3	Diaphragm kit x2	DXK-3	**187.46**
4	Shaft & seal kit	DXK-4	**52.22**
5	End cap seal kit x2	DXK-5	**30.00**
6	Caps & screws x2	DXK-6	**21.80**
7	End cap nut x10	DXK-7	**22.50**
8	End Cap	DXK-8	**32.34**

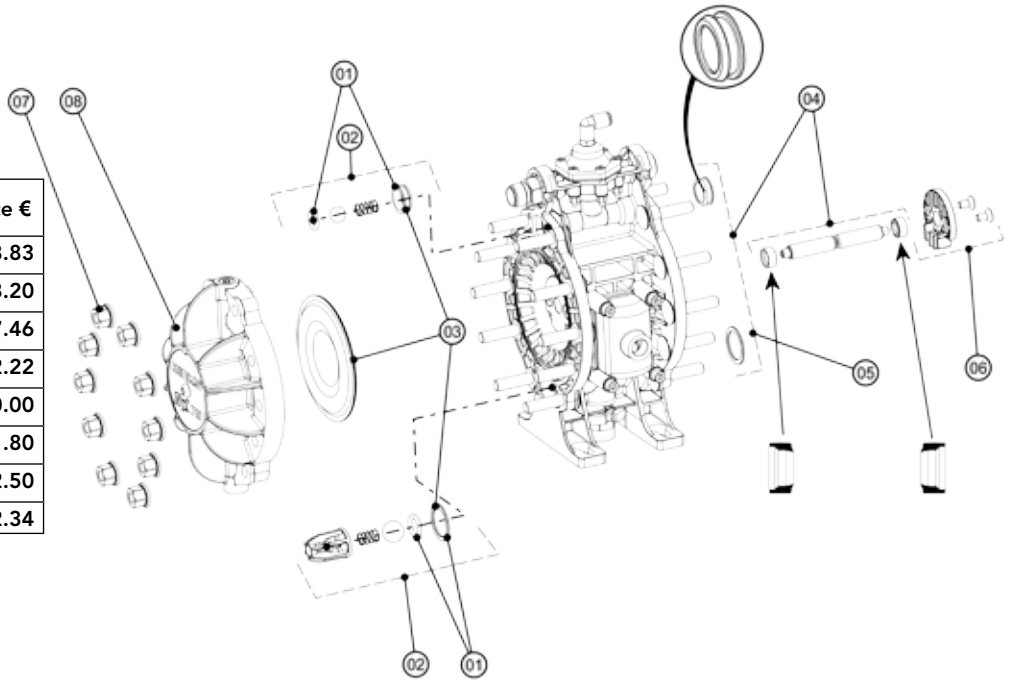

Ref. No	Description	Part No.	Price €
9	Inlet, outlet & plug connector seal kit	DXK-9	**27.00**
10	Male inlet connector kit	DXK-10	**27.00**
11	Female inlet connector kit	DXK-11	**28.02**
12	Male outlet connector kit	DXK-12	**27.00**
13	Female outlet connector kit	DXK-13	**27.00**
14	Air valve kit	DXK-14	**84.05**
15	Fluid regulator kit	DXK-15	**58.30**
16	Regulator cap & screws	DXK-16	**19.67**
17	Inlet (x2) & outlet (x2) clips	DXK-17	**13.50**
18	Cover, seal & screws	DXK-18	**19.47**
19	Female inlet / outlet thread seal x4	DXK-19	**11.33**
20	O-ring x5	DXK-20	**10.80**
21	O-ring x5	DXK-21	**16.17**
22	O-ring x5	DXK-22	**25.00**
23	O-ring x5	DXK-23	**10.40**
24	O-ring x5	DXK-24	**18.33**
25	Gasket x4	DXK-25	**11.00**
26	Blanking plate & screws ‡	DXK-26	**25.24**
27	Blanking gasket x 4 ‡	DXK-27	**18.33**
28	Insert ‡	DXK-28	**25.00**
29	Grounding cable 4m	0114-011798	**19.47**

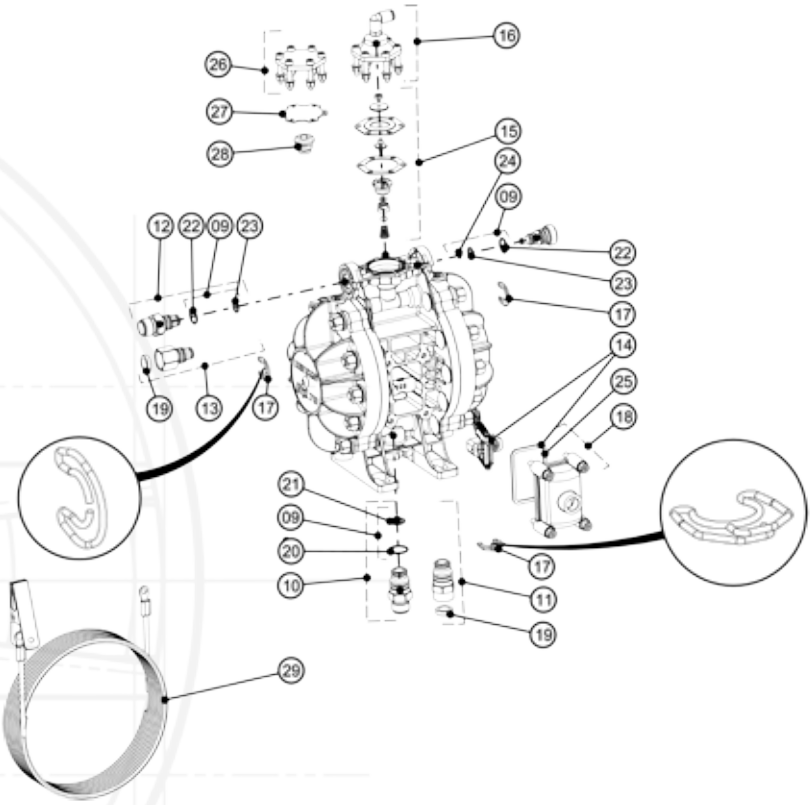

‡ = parts for non-fluid regulator model

32:1 HIGH PRESSURE PUMP WITH BINKS TROPHY AA4400M AIR ASSISTED AIRLESS SPRAY GUN

- **Patented air valve technology. Enables pump to change over quickly to significantly reduce pulsation.**
- **Long lasting ceramic coated piston rods. Superior wear resistance lasting up to three times longer than hard chrome pistons.**
- **Designed to pump long with less downtime and extended packing life. Self-adjusting sprint loaded fixed packings last up to three times longer than the competition. Large sight glass for visual packing inspection.**
- **Air Assisted Airless HVLP Spray Gun provides the latest atomisation technology.**
- **Stainless Steel system – pump and gun.**





- **Lightweight Air Assisted Airless Gun.**
- **High quality atomization for industry leading finish.**
- **Solid forged gun body for maximum durability and longer life.**
- **Quick-Clean™ gun coating for fast cleaning and maintenance**
- **Wide selection of flat, fine-finish and twist tips available.**

Part No.	Description	Price €
MXL432PU-C-F-ACG	Cart Mounted (Part No includes Trophy AA4400 Gun)	**2,949.92**
MXL432PU-T-F-ACG	Tripod Mounted (Part No includes Trophy AA4400 Gun)	**2,611.05**
4400-H10000	Trophy AA4400 with AA10 HVLP air cap, without flat tip	**723.00**

Gun Specification

Maximum fluid pressure	303 Bar (4,400 psi)
Maximum air inlet pressure	7 bar [105 psi]
Gun body material	Forged Aluminium
Fluid path material	Stainless Steel
Fluid seat Material	Tungsten Carbide
Fluid inlet connection	1/4" NPS (m)
Air inlet connection	1/4" BSP / NPS (m)

Pump Specification

Ratio	32:1
Max Inlet Pressure	8.0 bar (116 psi)
Flow Rate Nominal	1.4 l/min
Flow Rate Max	4.0 l/min
Volume/Cycle	24cm^3
Max Operating Pressure	256 bar (3600 psi)
Cylinder Diameter	85 mm
Piston Stroke	75 mm
Air Consumption @ 20 cycles/min	147 l/min

Accessories

Part No	Description	Price €
0110-009132	Filter insert for high pressure filter - 100 mesh	**70.04**
0110-009133	Filter insert for high pressure filter - 150 mesh	**70.04**
0110-009134	Filter insert for high pressure filter - 200 mesh	**70.04**

FOR A DETAILED BREAKDOWN OF THE MXL PUMPS PLEASE CONSULT YOUR SERVICE BULLETIN OR CONTACT THE DEVILBISS CUSTOMER SERVICE DEPARTMENT.

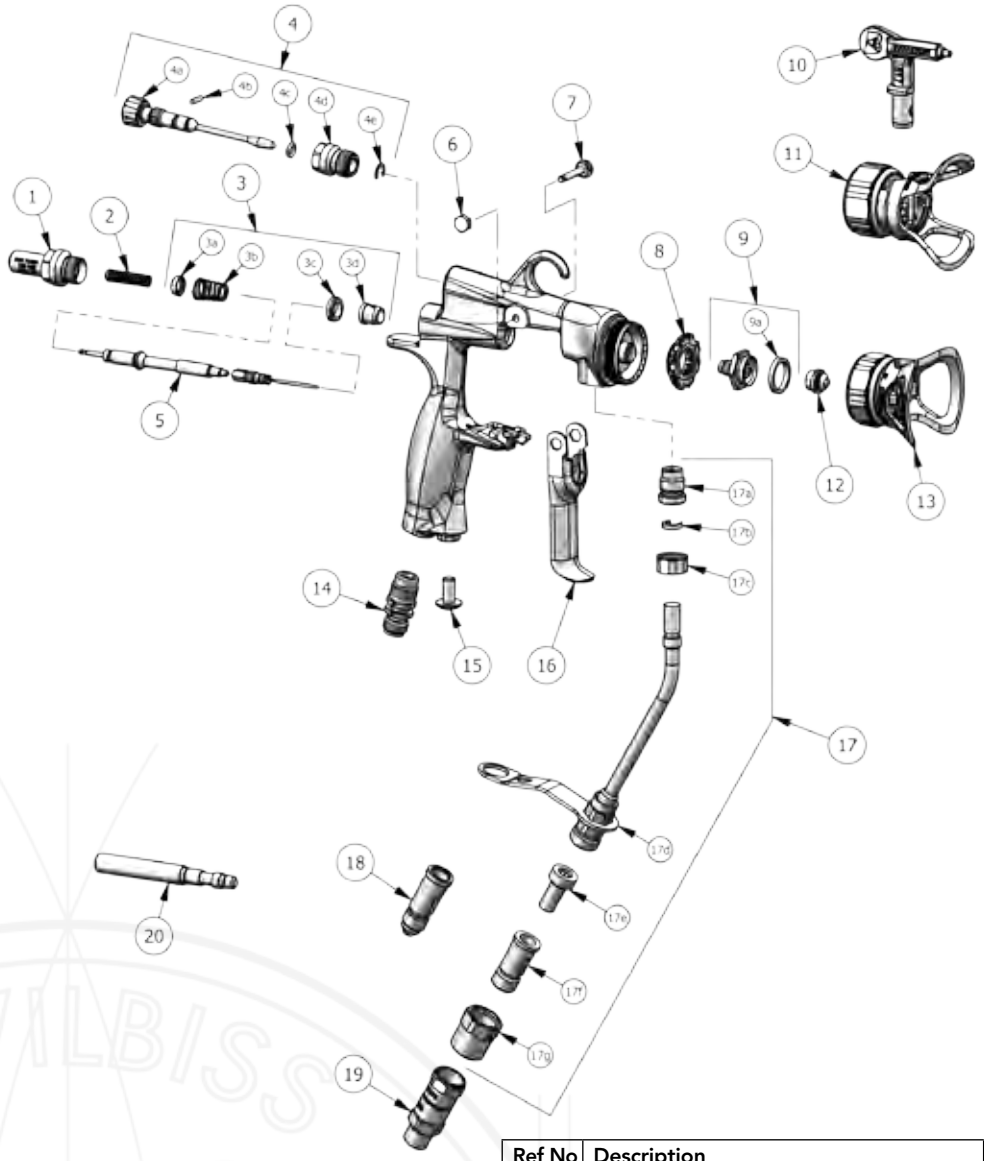

Ref No	Description	Part No.	Price €
1	Air valve housing	54-6007	
2	Needle return spring kit (multi-pack)	54-5935-K5	
3	Spindle seal & spring kit	54-6131-K	
3a	Rear seal	-	
3b	Air valve spring	-	
3c	Valve seal	-	
3d	Front seal	-	
4	Spreader valve assembly	54-5815	
4a	Valve stem	-	
4b	Pin	-	
4c	O-ring (multi-pack)	SN-71X-K2	
4d	Valve body	-	
4e	Snap ring	-	
5	Air valve & fluid needle assembly	54-5937	
6	Trigger nut	54-6114	
7	Trigger Screw	54-6115	
8	Baffle plate (multi-pack)	SPA-71-K5 SPA-71-K10	
9	Fluid nozzle & gasket (flat tip)	54-5811-K	
	Fluid nozzle & gasket (twist tip)	54-5833-K	

Ref No	Description	Part No.	Price €
9a	Gasket (multi-pack)	SPA-98-K5 SPA-98-K10	
10	Reversible twist tip	-	
11	HVLP twist tip air cap assembly	54-5924-K	
12	Flat tip assembly	-	
	Fine finish flat tip assembly	-	
13	AA10+ air cap assembly	54-6030-K	
14	Air inlet (multi-pack)	SN-9-K3	
15	Slotted round head screw, 1/4" - 20 x 1/2"	-	
16	Trigger	54-6019	
17	Fluid tube assembly	54-6015	
17a	Fluid tube adapter	-	
17b	Fluid tube retainer (multi-pack)	54-5896-K5	
17c	Ferrule nut	54-5899	
17d	Filter bracket	54-6017	
17e	Fluid filter, 100 mesh	54-1835	
17f	Disc filter body, 1/4" nps (m)	54-4726-K	
17g	Disk filter retainer	-	
18	JIC #5 fluid inlet fitting (sold separately	54-5897	
19	Swivel adapter, 1/4" nps m x f (sold separately)	72-2360	
20	Tool	SPN-7	

BINKS PRESSURE FEED TANK

- **Zinc plated tank shell for long service life.**
- **Single regulator and gauge to control tank and air pressure.**
- **Zinc plated lid assemblies for solvent based coatings.**
- **Positive four point lid clamping for secure operation.**
- **High density polyethylene, tank liners ensure efficient use.**



Specification

Tank Capacity	9.5 litre
Maximum working Pressure	5.5 bar (80 psi)
Safety Valve Set Pressure	5.5 bar (80 psi)
Air Inlet Size	1/4" BSP (M)
Fluid Outlet Size	3/8" BSP (M)
Tank Shell	SA-620 H.R Steel Zinc plate 2.7mm (8 gauge)
Tank Lid	SA-414 H.R Steel Zinc plate 4.2mm (3/16")
Fluid Tube	Steel, Galvanised Zinc Plate
Air Manifold	CRS Zinc Plated
Fluid Outlet	Steel, Galvanised Zinc Plate
Lid Gasket	Santoprene™

Spray Gun Kits for use with KBII

Part No	Description	Price €
PROGTI-PTE**-**BK	GTi Pro Pressure Feed Gun with either TE10, TE20, TE30 or TE40 air cap and either 085, 10, 12 or 14 fluid tip	**POA**
PROLT-PTE**-**BK	GTi Pro LITE Pressure Feed Gun with either TE10, TE20, TE30 or TE40 air cap and either 085, 10, 12 or 14 fluid tip	**POA**
JGAPPRO-**-***	Pressure Feed Gun with either C1, C2 or C3 air cap and either 085 12, 14, 16 or 18 fluid tip	**POA**

Kit contents are spray gun, (suction cup with filter if appropriate), Torx key, brush and multi-fit spanner
** = Air Cap / *** = Fluid Tip

Pressure Feed Tank

Part No	Description	Price €
83C-210-B	9.5 litre capacity zinc plated tank and lid assembly	**775.59**
PT-78-K10	Kit of 10 polyethylene inner liners for 9.5 litre capacity tank	**53.87**
VS-522	Paint filter (100 mesh) and housing – fits directly onto fluid outlet of tank - BSP	**POA**
H-7501HA-10	10 metre - 5/16"ID Air Hose Assembly	**110.21**
H-7502HA-10	10 metre - 3/8"ID Air Hose Assembly	**110.21**
H-7503HA-10	10 metre - 1/4"ID Fluid Hose Assembly	**126.69**
H-7504HA-10	10 metre - 3/8"ID Fluid Hose Assembly	**129.78**



PT-78-K10


Air Hose


Fluid Hose

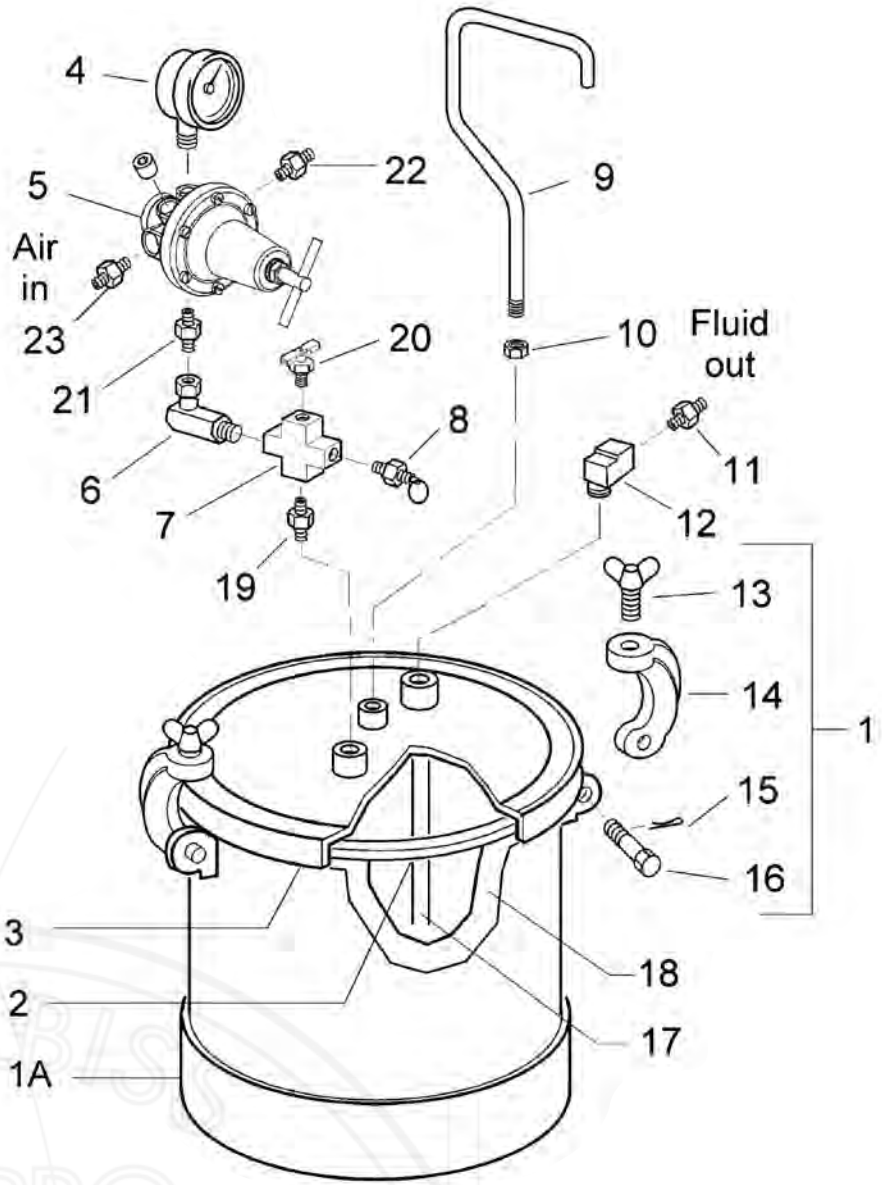

Ref No	Description	Part Number	Price €
1	Tank Assembly Kit (Includes Ref Nos. 1A, 13, 14, 15 & 16)	-	-
1A	Tank Shell	-	-
2	Lid Gasket, Santoprene	PT-33-1	**33.37**
3	Lid, Zinc Plated	-	-
4	Gauge	83-2727	**44.29**
5	Regulator	HAR-511	**106.09**
6	90° Swivel Adaptor 1/4' NPS (F) x 1/4' NPT (M)	SSP-30-ZN	**28.43**
7	Cross 1/4' NPT (F)	-	-
8	Safety Valve - 80 psi	TIA-5080-CE	**16.17**
9	Handle	PT-32	**4.02**
10	Hex Nut 3/8' – 16	-	-
11	Nipple 3/8' NPT (M) x 3/8' NPT (M)	AD-11	**8.14**
	Nipple 3/8' NPT (M) x 3/8' BSP (M)	2101007	**3.71**
12	Street Elbow 3/8' NPT (F) x 3/8' (M) S.S	SSP-1939	**20.39**

Ref No	Description	Part Number	Price €
13	Thumb Screw	-	-
14	Yoke Assembly	-	-
15	Cotter Pin, 3/32 x 1"	-	-
16	Hinge Pin	-	-
17	Fluid Tube	PT-31	**25.85**
18	Tank Liner (Kit of 10)	PT-78-K10	**53.87**
	Tank Liner (Kit of 60)	PT-78-K60	**248.23**
19	Hex Nipple 1/4' NPT (M)	-	**2.27**
20	Air Relief Valve	SS-2707	**6.80**
21	D.M Nipple	83-4233	**3.61**
22	(NPS) Nipple 1/4 ' NPT (M) x 1/4' NPS (M)	H-2008	**14.32**
	(BSP) Nipple 1/4 ' NPT (M) x 1/4' BSP (M)	2101004	**2.68**
23	(NPS) Nipple 3/8' NPT (M) x 1/4' NPS (M)	83-4233	**3.61**
	(BSP) Nipple 3/8' NPT (M) x 1/4' BSP (M)	2101005	**2.88**

DVFR-1
FILTER REGULATOR

Part No	Description	Price €
DV-9420601	Filter bowl removal tool	**29.97**

Ref No	Description	Part Number	Price €
1	Upper Cover Assembly	DV-9450806	**115.36**
2	Filter (Air)	DV-9451705	**42.23**
3	Metal Filter Bowl	DV-9453301-MET	**83.12**
4	Ball Valve	SER-3414-MF	**19.06**
5	Pressure Gauge	GA-319	**44.29**
6	Isolation Valve	DV-8000035	**72.62**

DVFR-2 FILTER
REGULATOR COALESCER

Part No	Description	Price €
DV-9420601	Filter bowl removal tool	**29.97**

Ref No	Description	Part Number	Price €
1	Upper Cover Assembly	DV-9450806	**115.36**
2	Filter (Air)	DV-9451705	**42.23**
3	Metal Filter Bowl	DV-9453301-MET	**83.12**
4	Ball Valve	SER-3414-MF	**19.06**
5	Pressure Gauge	GA-319	**44.29**
6	Fine Filter (Oil)	DV-9451711	**192.61**
7	Isolation Valve	DV-8000035	**72.62**

DVFR-3
FILTER REGULATOR

Ref No	Description	Part Number	Price €
1	Upper Cover Assembly	DV-9350811	**70.35**
2	Filter	9351706	**42.23**
3	Metal Filter Bowl	DV-9353301	**97.85**
4	Ball Valve	SER-3414-MF	**19.06**
5	Pressure Gauge	GA-319	**44.29**

DVFR-8 FILTER REGULATOR COALESCER
WITH ACTIVATED CARBON FILTER

Part No	Description	Price €
DV-9420601	Filter bowl removal tool	**29.97**

Ref No	Description	Part Number	Price €
1	Upper Cover Assembly	DV-9450806	**115.36**
2	Filter (Air)	DV-9451705	**42.23**
3	Metal Filter Bowl	DV-9453301-MET	**83.12**
4	Ball Valve	SER-3414-MF	**19.06**
5	Pressure Gauge	GA-319	**44.29**
6	Fine Filter (Oil)	DV-9451711	**192.61**
7	Isolation Valve	DV-8000035	**72.62**
8	Activated Carbon Filter	DV-9451711AC	**192.61**

DVFR-1

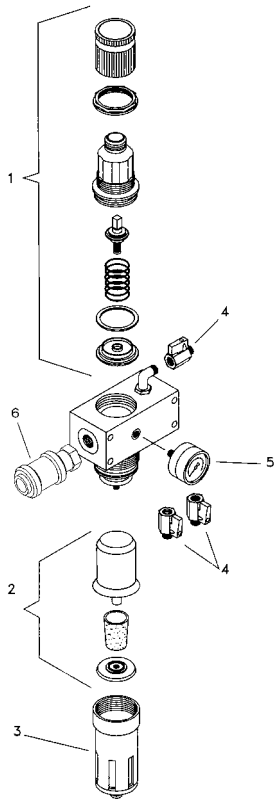

DVFR-2

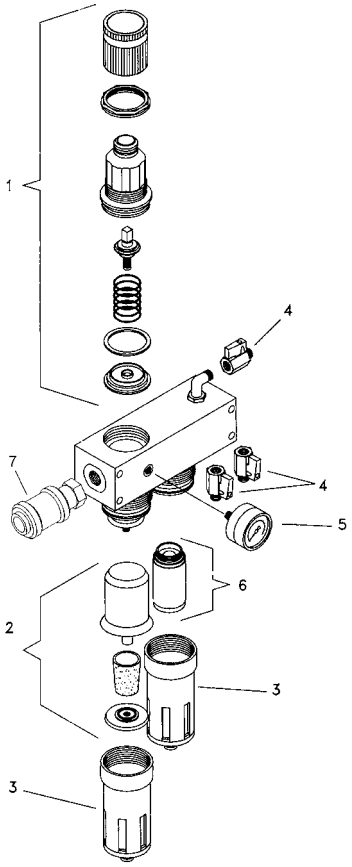

DVFR-3

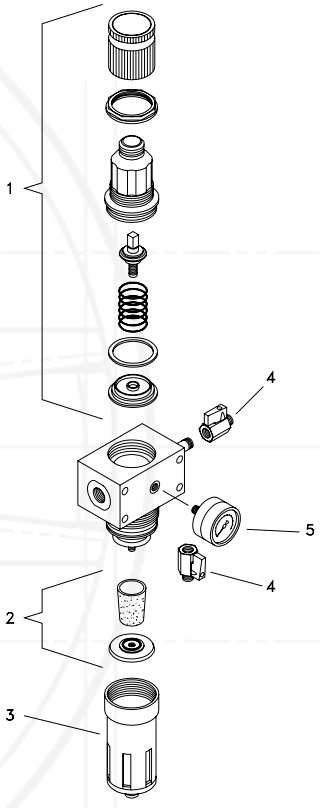

DVFR-4

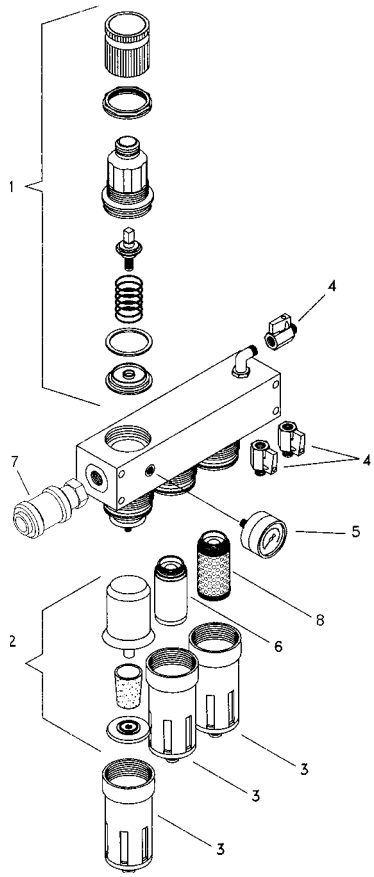

SHiM-MASK by DeVILBISS

STAINLESS STEEL MASKING STENCIL TO PREVENT RUB-THROUGH WHEN SANDING OR SHAVING MINOR SURFACE IMPERFECTIONS

Ideal for:

- Paint and lacquer runs.
- Imperfections.
- Minimising area when sanding paint-filled chips or scratches.

Advantages:

- Stainless steel 304 provides hardness for re-use.
- Chemically etched shapes eliminates burred edges.
- Choice of four stencil shapes.



Specification

Dimensions	H: 100 mm D: 90 mm W: 1 mm
Weight	13g each

Shim Mask

Part No	Description	Price €
SHIM-3	Pack of three stainless steel shim masks	**24.41**









PRO-450-**-**	Air cap, fluid tip and needle kit (Part 8, 2 & 4)	POA

Kit Part No.	Air Cap	Fluid Tip
PRO-450-	H1	12
	T1	13
	T2	14

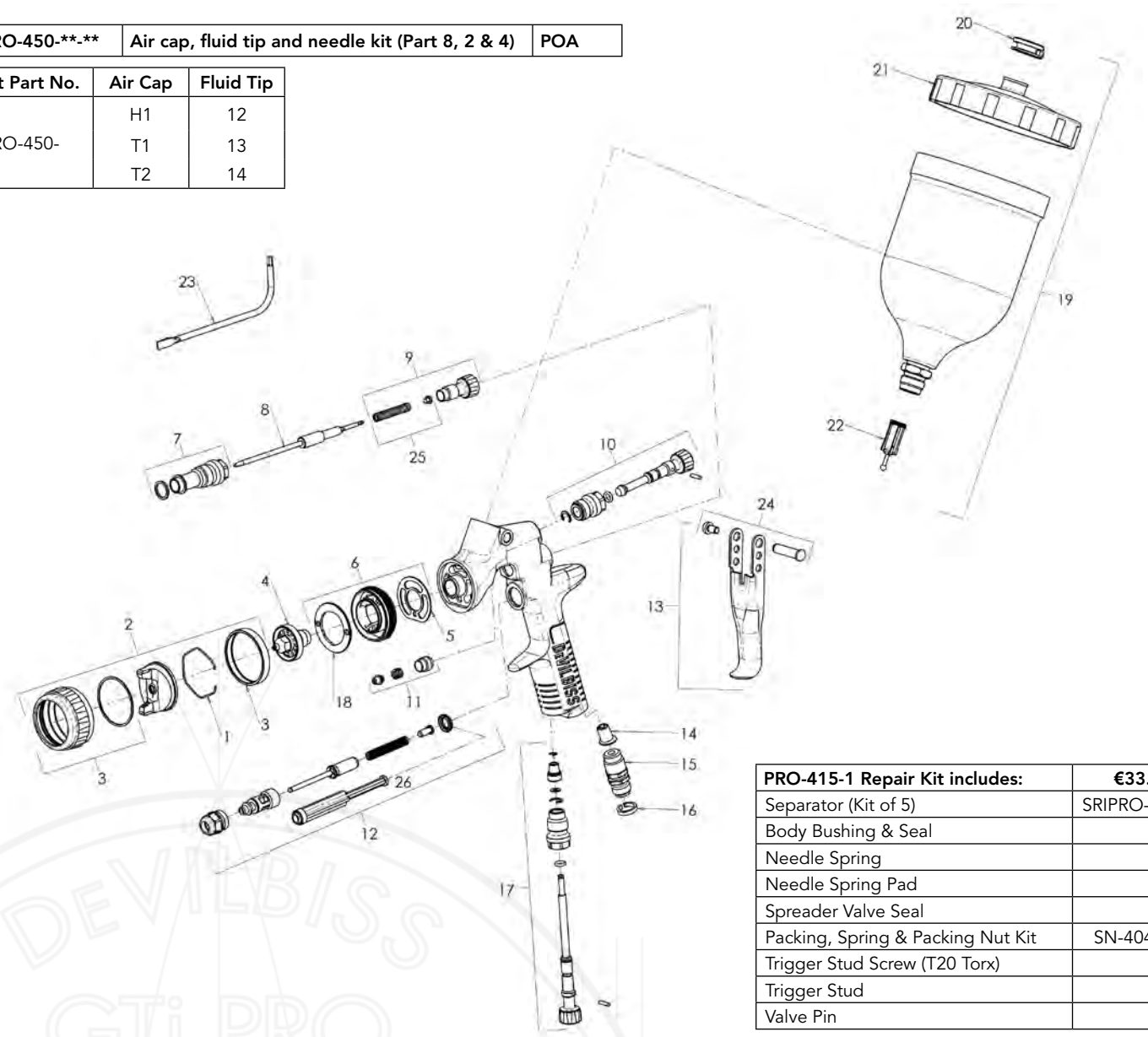

PRO-415-1 Repair Kit includes:	€33.99
Separator (Kit of 5)	SRIPRO-2K
Body Bushing & Seal	-
Needle Spring	-
Needle Spring Pad	-
Spreader Valve Seal	-
Packing, Spring & Packing Nut Kit	SN-404-K
Trigger Stud Screw (T20 Torx)	-
Trigger Stud	-
Valve Pin	-

Ref No	Description	Part Number	Price €
1	Air Cap Retaining Clip	JGA-156-K5	**20.39**
2	T1 Trans-tech® Aircap & Ring	PRO-100-T1-K	**123.60**
	T2 Trans-tech® Aircap & Ring	PRO-100-T2-K	**123.60**
	H1 HVLP Aircap & Ring	PRO-100-H1-K	**123.60**
3	Air Cap Retaining Ring & Seals	PRO-405-K	**51.29**
4	Fluid Tip – 12, 13, 14	PRO-200-**-K	**POA**
5	Spray Head Seal (kit of 2)	SN-18-1-K2	**5.67**
6	Spray Head & Seal Kit	SN-17-1-K	**44.50**
7	Body Bushing & Seal	SN-6-K	**40.07**
8	Fluid Needle	PRO-300-K	**36.77**
9	Fluid Adjusting Knob, Spring & Pad Kit	PRO-3-K	**31.00**
10	Spreader Valve Assembly	PRO-402-K	**39.76**
11	Packing, Spring & Packing Nut Kit	SN-404-K	**14.32**
12	Air Valve Replacement Kit	SN-402-K	**87.24**

Ref No	Description	Part Number	Price €
13	Trigger, Stud & Screw Kit	SN-21-K	**35.43**
14	Insert – Pack of 5 (with DGi Pod Only)	SN-57-K5	**12.77**
15	Air Inlet	SN-40-K	**14.52**
16	Colour ID Ring Kit (4 Colours)	SN-26-K4	**2.78**
17	Airflow Valve	PRO-411-K	**57.37**
18	Baffle plate	SN-41-K	**7.62**
19	Gravity Cup Kit	GFC-501	**43.78**
20	Drip Check Lid (kit of 5)	GFC-2-K5	**4.43**
21	Gravity Cup Lid	GFC-402	**3.40**
22	Filter	KGP-5-K5	**7.11**
23	Torx Key	SPN-8-K2	**9.89**
24	Trigger Stud & Torx Screw (kit of 5)	SN-405-K5	**66.95**
25	Needle spring and pad kit	SN-4-K3	**18.75**
26	Air valve seal & service tool	SN-34-K5	**21.53**

PRIPRO-450-**-**	Air cap, fluid tip and needle kit (Part 8, 2 & 4)	POA

Kit Part No.	Air Cap	Fluid Tip
PRIPRO-450-	P1	14 16 18 20 25

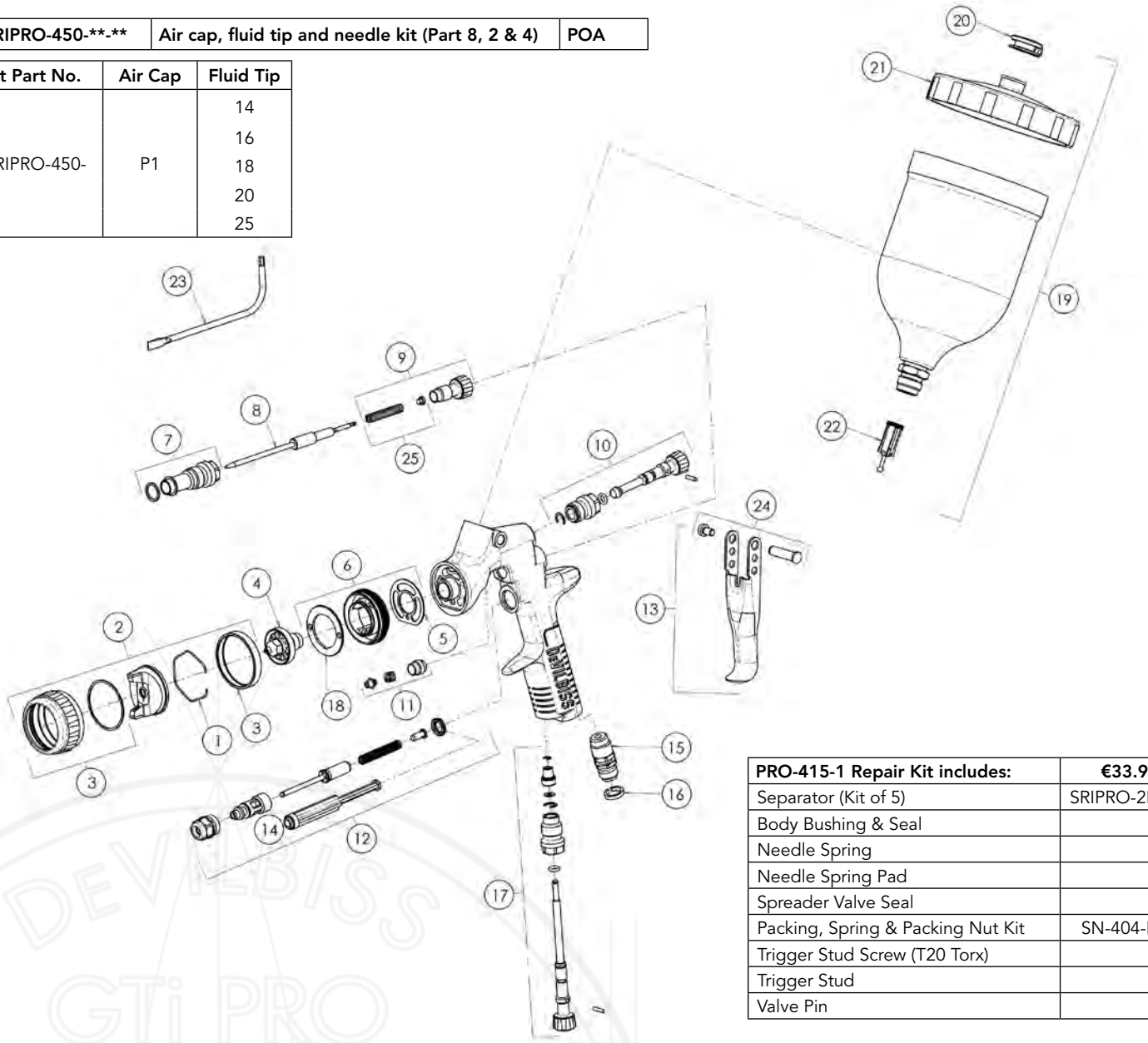

PRO-415-1 Repair Kit includes:	€33.99
Separator (Kit of 5)	SRIPRO-2K
Body Bushing & Seal	-
Needle Spring	-
Needle Spring Pad	-
Spreader Valve Seal	-
Packing, Spring & Packing Nut Kit	SN-404-K
Trigger Stud Screw (T20 Torx)	-
Trigger Stud	-
Valve Pin	-

Ref No	Description	Part Number	Price €
1	Air Cap Retaining Clip	JGA-156-K5	**20.39**
2	Trans-tech® Aircap	PRIPRO-100-P1-K	**123.60**
3	Air Cap Retaining Ring & Seals	PRO-405-K	**51.29**
4	Fluid Tip – 14, 16, 18, 20, 25	PRIPRO-210-**-K	**POA**
5	Spray Head Seal (kit of 2)	SN-18-1-K2	**5.67**
6	Spray Head & Seal Kit	SN-17-1-K	**44.50**
7	Body Bushing & Seal	SN-6-K	**40.07**
8	Fluid Needle	PRIPRO-310-K	**36.77**
9	Fluid Adjusting Knob, Spring & Pad Kit	PRO-3-K	**31.00**
10	Spreader Valve Assembly	PRO-402-K	**39.76**
11	Packing, Spring & Packing Nut Kit	SN-404-K	**14.32**
12	Air Valve Replacement Kit	SN-402-K	**87.24**
13	Trigger, Stud & Screw Kit	SN-21-K	**35.43**

Ref No	Description	Part Number	Price €
14	Air valve seal & service tool	SN-34-K5	**21.53**
15	Air Inlet	SN-40-K	**14.52**
16	Colour ID Ring Kit (4 Colours)	SN-26-K4	**2.78**
17	Airflow Valve	PRO-411-K	**57.37**
18	Baffle plate	SN-41-K	**7.62**
19	Gravity Cup Kit	GFC-501	**43.78**
20	Drip Check Lid (kit of 5)	GFC-2-K5	**4.43**
21	Gravity Cup Lid	GFC-402	**3.40**
22	Filter	KGP-5-K5	**7.11**
23	Torx Key	SPN-8-K2	**9.89**
24	Trigger Stud & Torx Screw (kit of 5)	SN-405-K5	**66.95**
25	Needle spring and pad kit	SN-4-K3	**18.75**

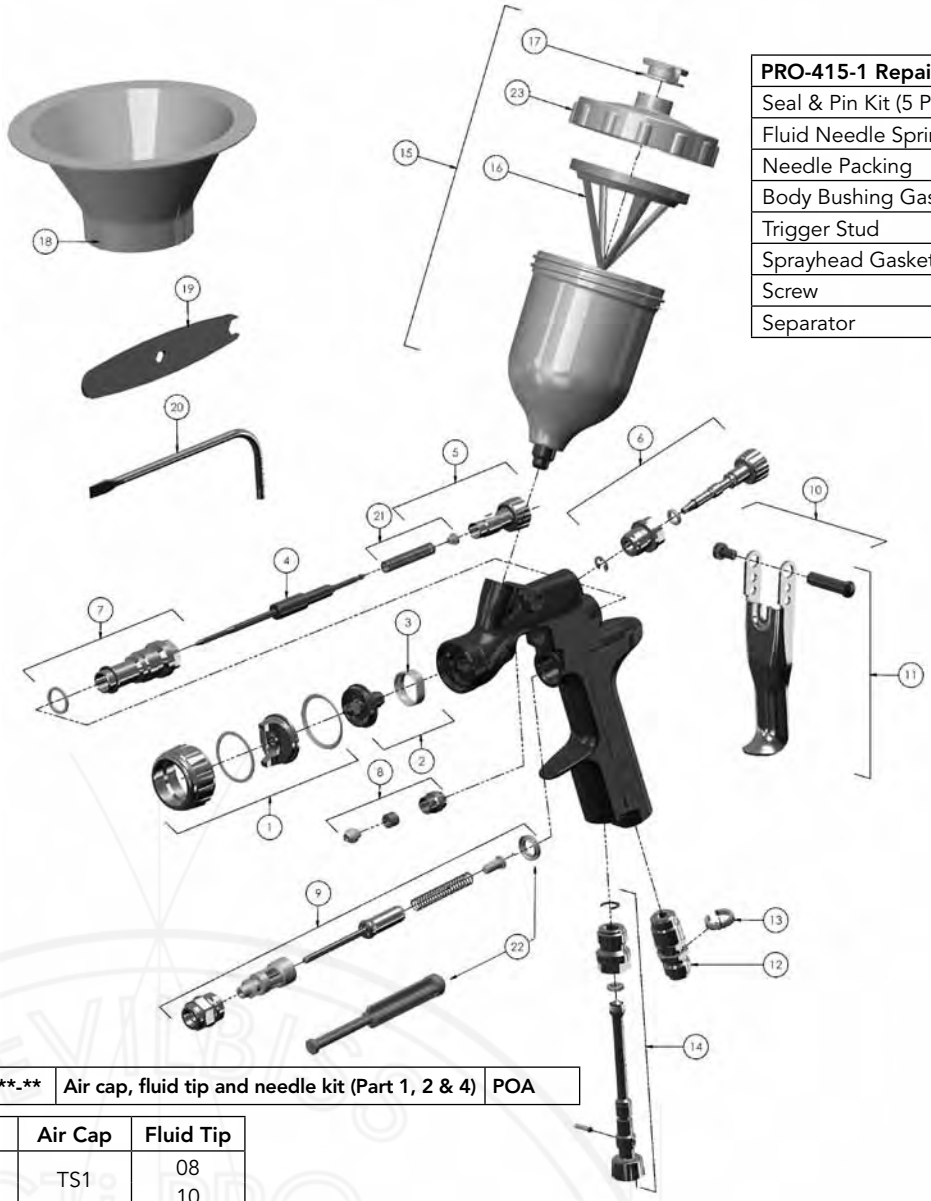

PRO-415-1 Repair Kit includes:	€33.99
Seal & Pin Kit (5 Pack)	GTI-428 K5
Fluid Needle Spring (Sub Assy)	SN-409
Needle Packing	SN-404
Body Bushing Gasket	SN-8
Trigger Stud	SN-13
Sprayhead Gasket	SN-18-1
Screw	SN-22
Separator	SRIPRO-2

SRIPRO-450-**-**	Air cap, fluid tip and needle kit (Part 1, 2 & 4)	POA

Kit Part No.	Air Cap	Fluid Tip
SRIPRO-450-	TS1 HS1	08 10 12

Ref. No	Description	Part No.	Price €
1	HVLP Air Cap & Ring	SRIPRO-100-HS1-K	**93.73**
	Trans-Tech Air Cap & Ring	SRIPRO-100-TS1-K	**93.73**
	Round Spray Air Cap & Ring	SRIPRO-100-RS1-K	**93.73**
2	Fluid Tip (** = 08, 10, 12 or 14)	SRIPRO-200-**-K	**POA**
3	Separator	SRIPRO-2-K5	**11.12**
4	Fluid Needle for No. 08 & No. 10 Fluid Tips	SRIPRO-300-08-10-K	**31.31**
	Fluid Needle for No. 12 & No. 14 Fluid Tips	SRIPRO-300-12-14-K	**31.31**
5	Fluid Adjusting Knob, Spring & Pad Kit	PRO-3-K	**31.00**
6	Spreader Valve Assembly	SRIPRO-401-K	**26.57**
7	Body Bushing & Seal	SN-6-K	**40.07**
8	Packing, Spring & Packing Nut Kit	SN-404-K	**14.32**
9	Air Valve Assembly	SN-402-K	**87.24**

Ref. No	Description	Part No.	Price €
10	Stud and Screw kit	SN-405-K5	**66.95**
11	Trigger, Stud & Screw Kit	SN-42-K	**18.03**
12	Air Inlet	SN-40-K	**14.52**
13	Colour ID Ring Kit (4 Colours)	SN-26-K4	**2.78**
14	Airflow Valve	PRO-404-K	**27.60**
15	Gravity Cup Kit	SRI-510	**43.78**
16	Filter	SRI-42-K3	**20.81**
17	Drip Check Lid (kit of 5)	GFC-2-K5	**4.43**
18	Funnel kit of 12	SRI-51-K12	**19.36**
19	Spanner kit of 2	SRI-50-K2	**12.67**
20	Torx Key	SPN-8-K2	**9.89**
21	Needle spring and pad kit	SN-4-K3	**18.75**
22	Air valve seal & service tool	SN-34-K5	**21.53**
23	Gravity Cup Lid	SRI-414-K2	**15.55**

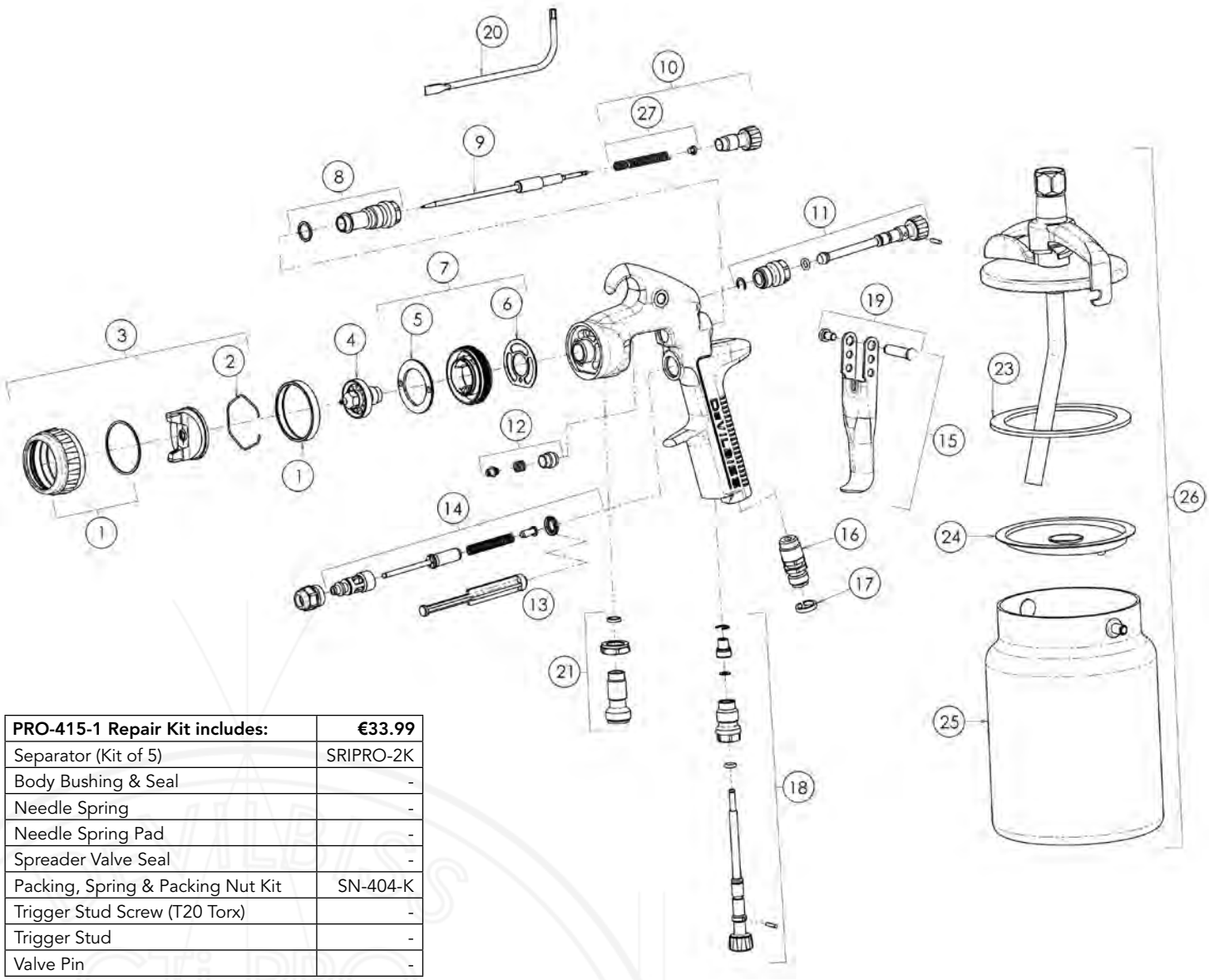

PRO-415-1 Repair Kit includes:	€33.99
Separator (Kit of 5)	SRIPRO-2K
Body Bushing & Seal	-
Needle Spring	-
Needle Spring Pad	-
Spreader Valve Seal	-
Packing, Spring & Packing Nut Kit	SN-404-K
Trigger Stud Screw (T20 Torx)	-
Trigger Stud	-
Valve Pin	-

Ref. No.	Description	Part No.	Price €
1	Air Cap Retaining Ring	PRO-405-K	**51.29**
2	Air Cap Retaining Clip	JGA-156-K5	**20.39**
3	Aircap & Ring (H1, T1, T2, T4)	PRO-100-**-K	**POA**
4	Fluid Tip (16, 18, 20	PRO-200-**-K	**POA**
5	Baffle Plate	SN-41-K	**7.62**
6	Spray Head Seal (kit of 2)	SN-18-1-K2	**5.67**
7	Spray Head & Seal Kit	SN-17-1-K	**44.50**
8	Body Bushing & Seal	SN-6-K	**40.07**
9	Fluid Needle	PRO-315-K	**36.77**
10	Fluid Adjusting Knob, Spring & Pad Kit	PRO-3-K	**31.00**
11	Spreader Valve Assembly	PRO-404-K	**27.60**
12	Packing, Spring & Packing Nut Kit	SN-404-K	**14.32**
13	Air Valve Seal	SN-34-K5	**21.53**
14	Air Valve Assembly	SN-402-K	**87.24**

Ref. No.	Description	Part No.	Price €
15	Trigger, Stud & Screw Kit	SN-21-K	**35.43**
16	Air Inlet	SN-40-K	**14.52**
17	Colour ID Ring Kit (4 Colours)	SN-26-K4	**2.78**
18	Airflow Valve	PRO-411-K	**57.37**
19	Stud and Screw kit	SN-405-K5	**66.95**
20	Torx Key	SPN-8-K2	**9.89**
21	Fluid Inlet Connector Kit	PRO-12-K	**18.03**
22	Cup Lid Assembly	KR-4001-B	**74.06**
23	Lid Gaskets - kit of 3	KR-11-K3	**6.49**
24	Drip Free Diaphragms - Kit of 5	KR-115-K5	**8.14**
25	Cup Only	KR-466-K	**58.30**
26	Complete Cup Assembly	KR-566-1-B	**109.18**
27	Needle spring and pad kit	SN-4-K3	**18.75**

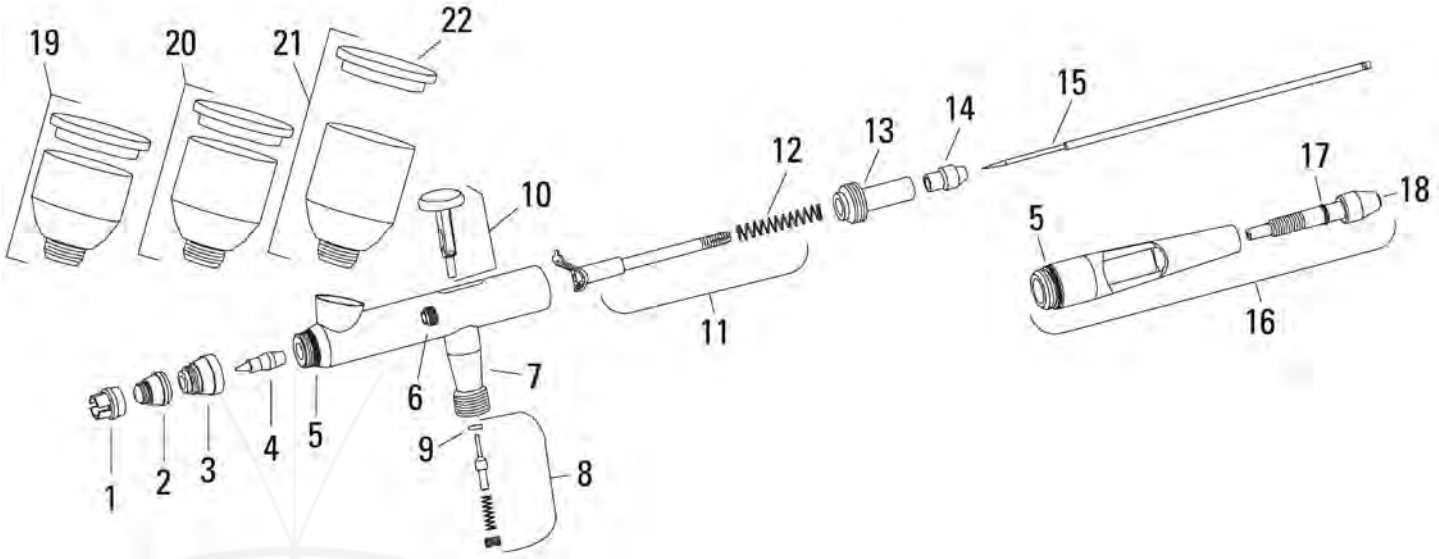

Ref. No.	Description	Part No.	Price €
1	Crown cap	DGR-101	**11.95**
2	Air cap (for .35mm Tip)	DGR-103-35	**18.75**
3	Head cap	DGR-104	**8.76**
4	Tip (.35mm)	DGR-105-35	**65.41**
* 5	O-ring (head cap & handle)	-	**-**
6	Packing and nut assembly (PTFE)	DGR-106K	**10.09**
7	Air valve casing	DGR-107	**10.51**
8	Air valve kit	DGR-108K	**32.96**
* 9	Air valve washer	-	**-**
10	Trigger assembly	-	**-**
11	Needle guide, rocker and spring	DGR-110K	**13.49**
* 12	Needle spring	-	**-**
13	Spring guide	DGR-111	**7.73**

Ref. No.	Description	Part No.	Price €
14	Needle locknut	DGR-112	**14.32**
15	Needle (for .35mm tip)	DGR-113-35	**31.00**
16	Cutaway handle w/pre-set	DGR-114	**30.59**
* 17	O-ring (pre-set needle knob)	-	**-**
18	Pre-set needle knob	DGR-116	**9.27**
19	1/4 oz. (7 cc) cup and lid	DGR-117	**45.22**
20	1/3 oz. (9 cc) cup and lid (standard)	DGR-118	**45.22**
21	1/2 oz. (14 cc) cup and lid	DGR-119	**51.29**
22	Cup lid	DGR-120	**7.93**
Repair Kit			
	DAGR repair kit - includes item numbers 5, 9, 12 & 17	DGR-121K	**25.96**

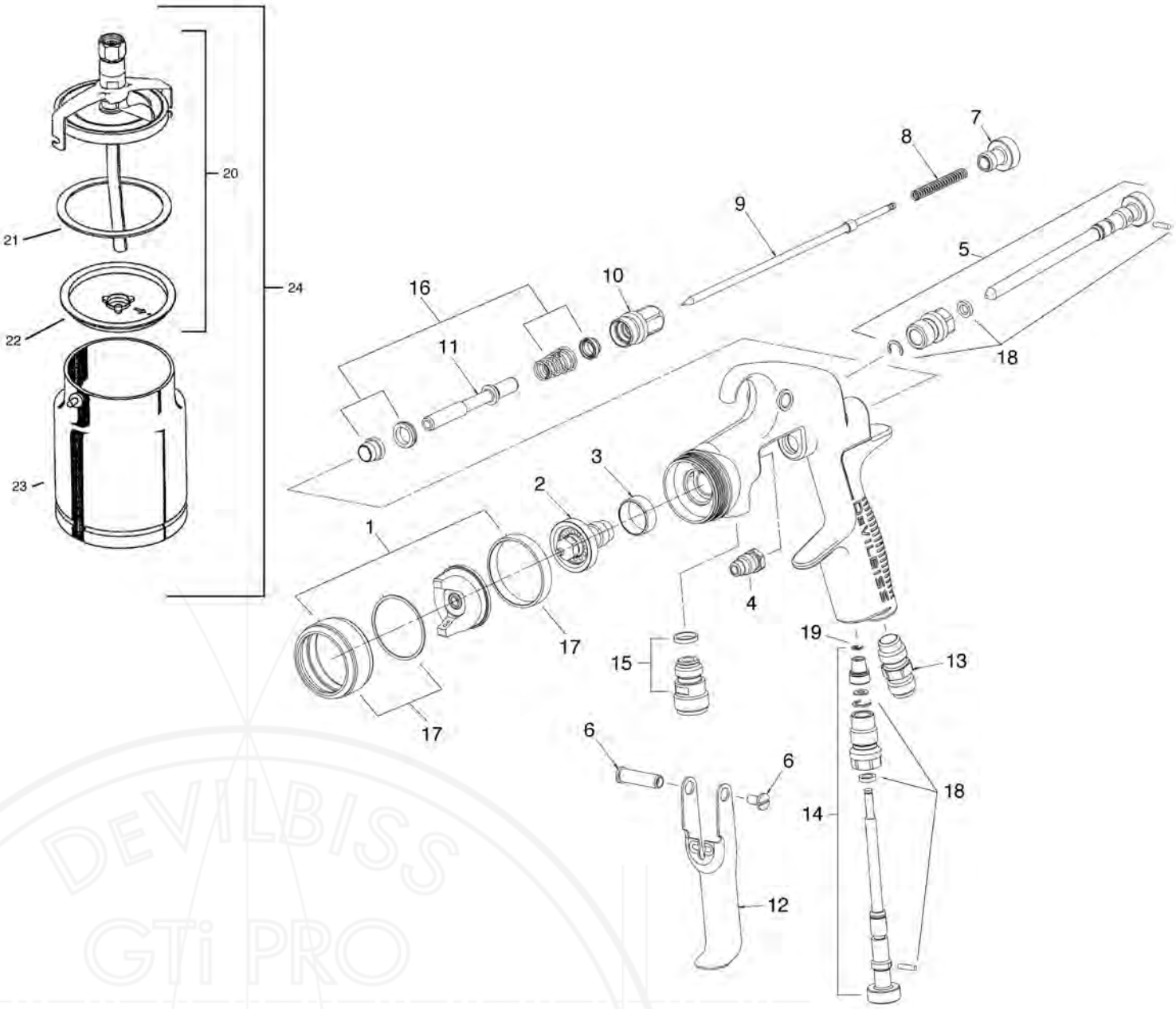

Ref No	Description	Part No.	Price €
1	Air Cap/Retaining ring	SP-100-510-K	**139.05**
2	Tip (** = 1.0, 1.4, 1.6, 1.8, 2.0, 2.2mm)	SP-200S-**-K	**POA**
3	Separator	SP-623-K5	**11.43**
4	Packing	GTI-445-K2	**42.72**
5	Spreader Valve	SP-401-K	**27.60**
6	Stud and Screw	GTI-408-K5	**86.64**
7	Needle Adjusting Screw	SP-614-K	**17.61**
8	Spring	SP-622-K5	**18.03**
9	Needle (** = 1.0, 1.4, 1.6, 1.8, 2.0, 2.2mm)	SP-300S-**-K	**POA**
10	Airvalve housing + seal	SP-612-K	**21.94**
11	Spindle	-	**-**
12	Trigger	SP-617-CR-K	**35.43**

Ref No	Description	Part No.	Price €
13	Connector	SP-611-K	**19.36**
14	Airflow Valve	SP-402-K	**69.11**
15	Fluid Inlet Connector and seal	SP-610–K	**19.36**
16	Air Valve Service Kit	SPK-101-K	**67.88**
17	Retaining Ring and Seals	SPK-102-K	**58.71**
18	Spreader/ Cheater Service Kit	GTI-428-K5	**24.72**
19	Circlip	25746-007-K5	**20.39**
20	Cup Lid Assembly	KR-4001-B	**74.06**
21	Lid Gasket - Kit of 3	KR-11-K3	**6.49**
22	Drip Free Diaphragm - Kit of 5	KR-115-K5	**8.14**
23	Cup	KR-466-K	**58.30**
24	Complete Cup	KR-566-1-B	**109.18**

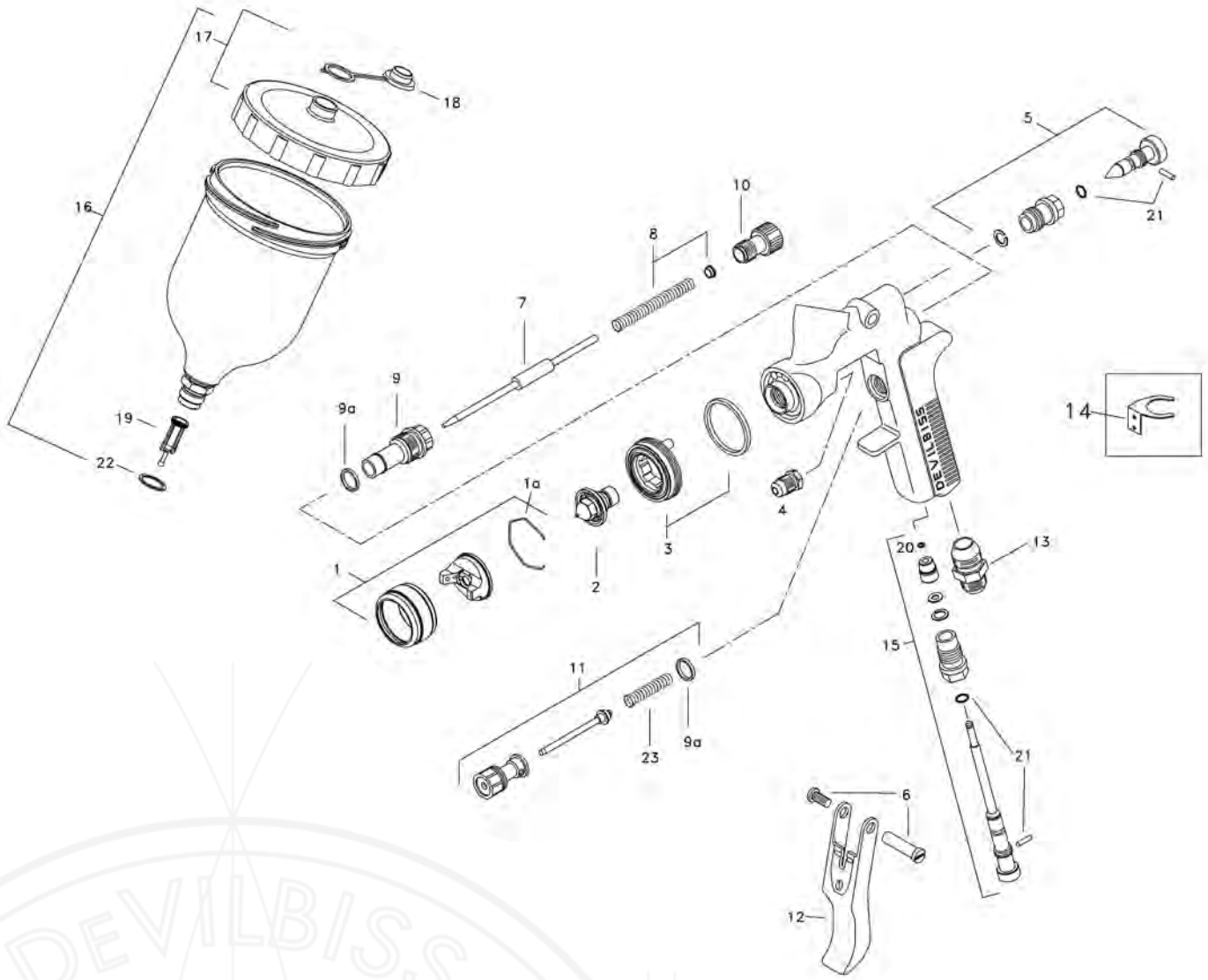

Ref No	Description	Part Number	Price €
1	GTi-W Air Cap / Retaining ring	GTi-407-115	**151.20**
	GTi-G Air Cap / Retaining ring	GTi-407-110	**144.00**
	PRi Air Cap / Retaining ring	PRi-407-310	**144.00**
1a	Spring Clip	JGA-156-K5	**20.39**
2	GTi-W Tip (1.3, 1.4 & 1.5mm)	GTi-213-**-K	**POA**
	GTi-G Tip (1.2, 1.3, 1.4 & 1.5mm)	GTi-213-**-K	**POA**
	PRi Tip (1.6, 1.8, 2.0, 2.2 & 2.5mm)	PRi-2-**-K	**POA**
3	Baffle & Seal	GTi-425-K	**54.00**
	Baffle Seal – Kit of 5	GTi-33-K5	**27.60**
4	Packing	GTi-445-K2	**42.72**
5	Spreader Valve	GTi-404-K	**32.64**
6	Stud and Screw	GTi-408-K5	**86.64**
7	GTi Needle	GTi-413-K	**47.76**
	PRi Needle	PRi-3-K	**45.24**
8	Spring and Pad	GTi-409-K5	**23.88**
9	Bushing	GTi-402-K	**70.32**
9a	Seal kit of 5	JGS-72-K5	**8.65**

Ref No	Description	Part Number	Price €
10	Needle Adjusting Screw	GTi-414-K	**30.12**
11	Valve Assembly	JGK-449-K	**92.48**
12	Trigger	GTI-108	**22.66**
13	Connector	JGA-158	**12.98**
14	Gun Hook	GFG-6	**11.43**
15	Airflow Valve	GTi-415-K	**76.56**
16	1⁄2 Ltr Gravity Cup Kit	GFC-501	**43.78**
17	Cup Lid	GFC-402	**3.40**
18	Drip Check Lid kit of 5	GFC-2-K5	**4.43**
19	Filter	KGP-5-K5	**7.11**
20	Circlip	25746-007-K5	**20.39**
21	Seal & Pin Kit (+SST8434-K5)	GTi-428-K5	**24.72**
22	Washer	GFC-17-K5	**0.82**
23	Spring	JGV-262-K5	**15.12**
	Service Kit for GTI gravity and suction - 12, 13, 14, 15, 16, 18, 20, 22 tip	GTI-416-**	**POA**
	Service Kit for PRi - 16, 18, 20, 22, 25 tip	PRi-416-**	**POA**

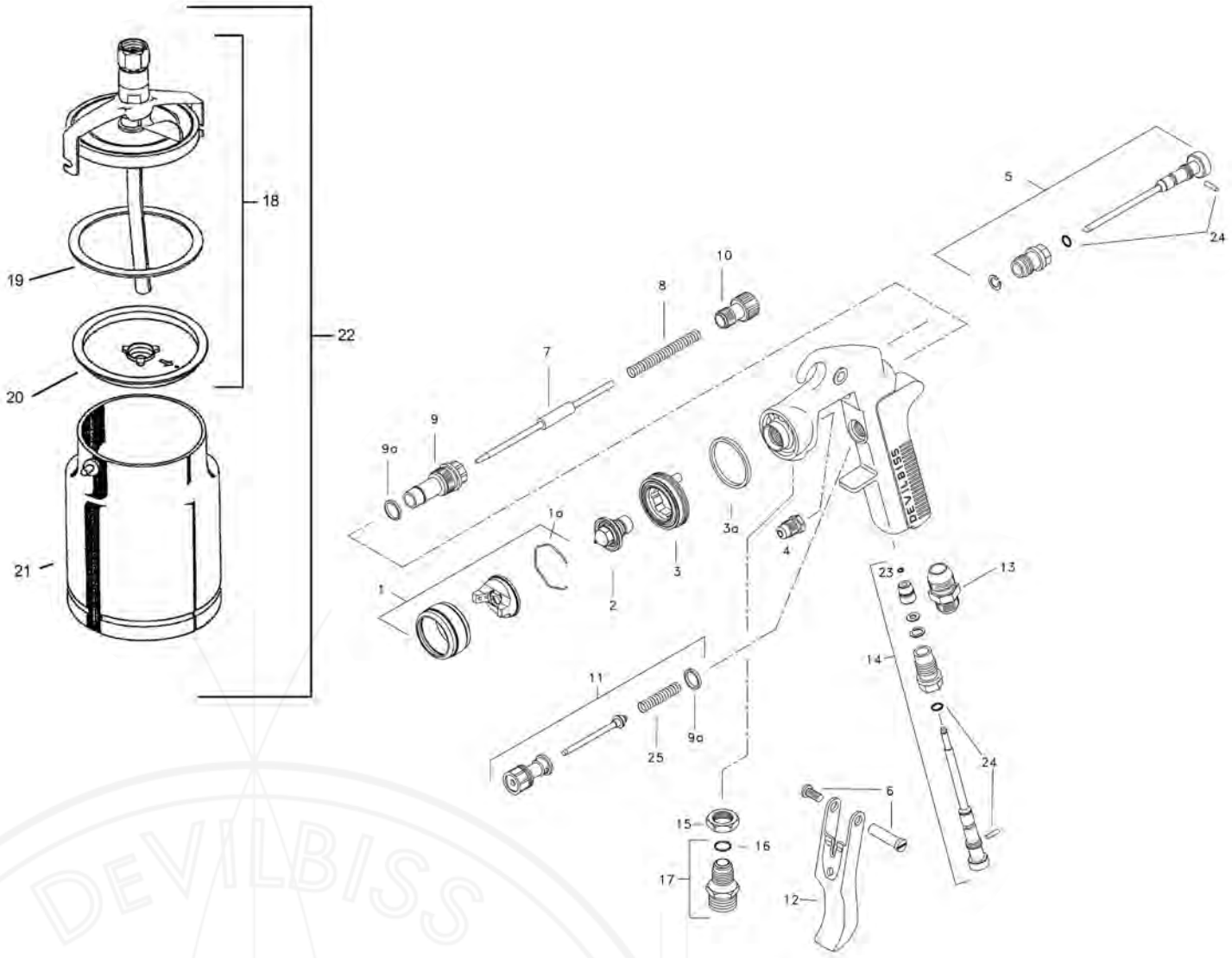

Ref. No	Description	Part Number	Price €
1	GTI-P air cap/retaining ring	GTI-407-123	**144.00**
	GTI-S air cap/retaining ring	GTI-407-110	**144.00**
1a	Spring Clip	JGA-156-K5	**20.39**
2	GTI-P Tip	GTi-213-**-K	**POA**
	GTI-S Tip	GTI-214-**-K	**POA**
3	Baffle & Seal	GTI-425-K	**54.00**
3a	Baffle seal—Kit of 5	GTI-33-K5	**27.60**
4	Packing	GTi-445-K2	**42.72**
5	Spreader Valve	GTI-405-K	**32.64**
6	Stud and Screw	GTI-408-K5	**86.64**
7	GTI-P needle	GTi-449-**-K	**POA**
	GTi-S needle (for GTI-214 Tip)	GTI-420-K	**47.76**
8	Spring and Pad	GTI-409-K5	**23.88**
9	Bushing	GTI-402-K	**70.32**
9a	Seal kit of 5	JGS-72-K5	**8.65**
10	Needle Adjusting Screw	GTI-414-K	**30.12**

Ref. No	Description	Part Number	Price €
11	Valve Assembly	JGK-449-K	**92.48**
12	Trigger	GTI-108	**22.66**
13	Connector	JGA-158	**12.98**
14	Airflow Valve	GTI-415-K	**76.56**
15	Lock Nut	JGA-51-K5	**13.80**
16	Seal	23165-001	**2.58**
17	Fluid Inlet Connector and seal	JGA-159-K	**12.77**
18	Cup lid assembly	KR-4001-B	**74.06**
19	Lid Gasket - kit of 3	KR-11-K3	**6.49**
20	Drip free diaphragm - kit of 5	KR-115-K5	**8.14**
21	Cup	KR-466-K	**58.30**
22	Complete cup	KR-566-1-B	**109.18**
23	Circlip	25746-007-K5	**20.39**
24	Seal & Pin Kit	GTI-428-K5	**24.72**
25	Spring	JGV-262-K5	**15.12**

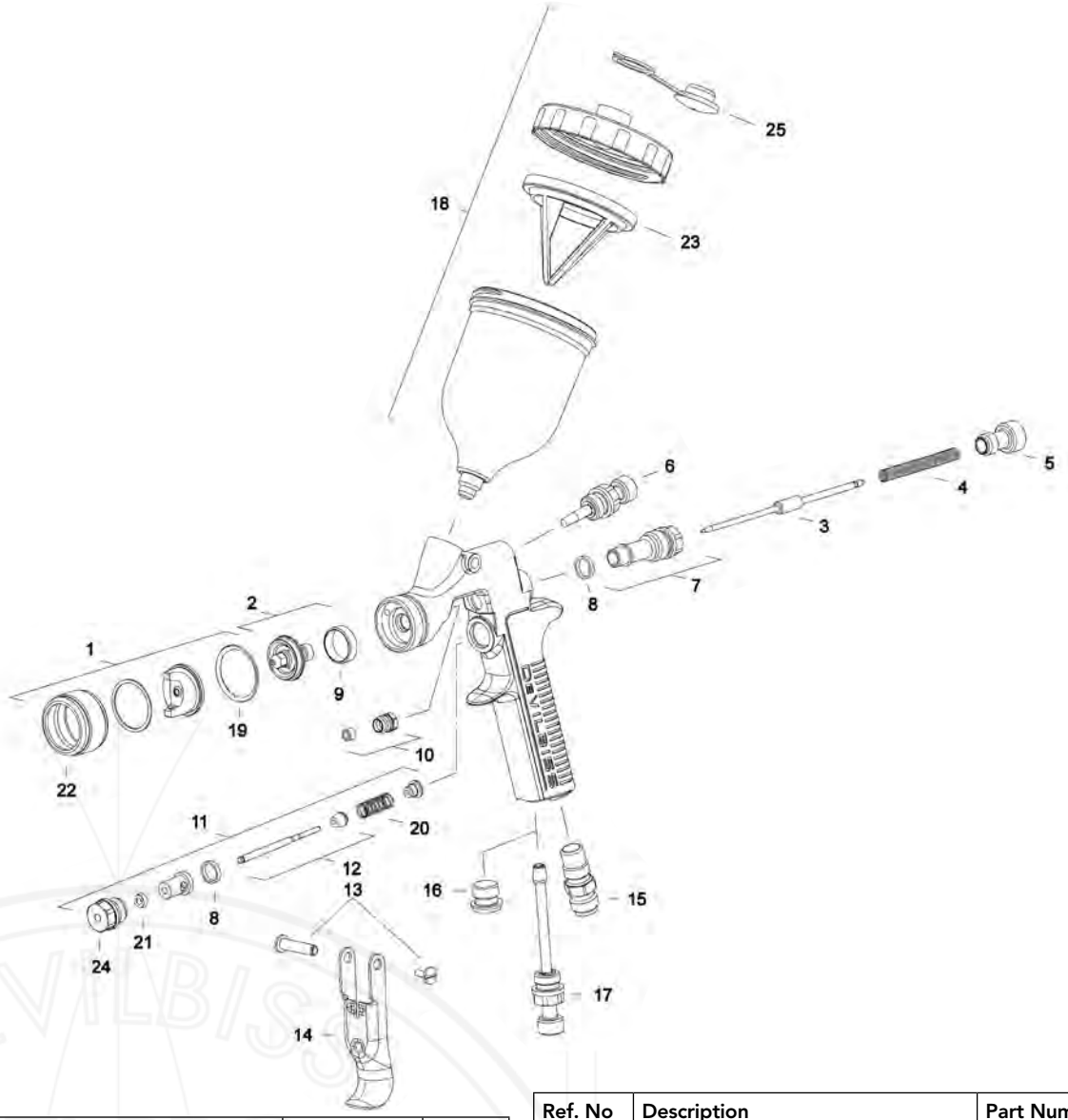

Ref. No	Description	Part Number	Price €
1 (SRi)	Air Cap/Retaining ring Trans-Tech	SRI-407-210	**POA**
		SRI-407-200	**POA**
1 (SRiW)	Air Cap/Retaining ring HVLP	SRI-407-215	**POA**
2	Tip 0.7 mm & seal	SRI-2-07-K	**133.20**
	Tip 0.8 mm & seal	SRI-2-08-K	**87.84**
	Tip 1.0 mm & seal	SRI-2-10-K	**POA**
	Tip 1.2 mm & seal	SRI-2-12-K	**POA**
3	Needle for 1.0 and 1.2 mm Tip	SRI-3-K	**POA**
	Needle for 0.7 and 0.8 mm Tip	SRI-37-K	**POA**
4	Needle Spring	SRI-18-K2	**7.15**
5	Needle Adjusting Knob	SRI-19-K2	**18.70**
6 (SRi)	Spreader Valve	SRI-401-K	**POA**
6 (SRiW)	Spreader Valve	SRI-415-K	**POA**
7	Body Bushing and Seal Kit	SRI-17-K	**13.97**
8	Seal	SRI-16-K5	**13.09**
9	Separator	SRI-6-K5	**POA**
10	Needle Packing Kit of 3	SRI-411-K3	**POA**

Ref. No	Description	Part Number	Price €
11	Air Valve Assembly	SRI-404-K	**POA**
12	Air Valve Stem Assembly	-	**-**
13	Trigger Stud and Screw Kit	SRI-412-K	**POA**
14	Trigger	SRI-9-K	**POA**
15 (SRi)	Air Inlet Adaptor	SRI-20-K	**POA**
15 (SRiW)	Air Inlet Adaptor	SRI-40-K	**POA**
16	Blanking Plug (to replace airflow valve)	SRI-21	**-**
17	Airflow Valve	SRI-402-K	**POA**
18	Cup	SRI-510	**43.78**
19	Aircap Seal	SRI-35-K5	**POA**
20	Airvalve Spring	SRI-23-K2	**POA**
21	Airvalve Seal	-	**-**
22	Retaining Ring	-	**-**
23	Filter	SRI-42-K3	**20.81**
24	Airvalve Body	-	**-**
25	Drip Check Lid Kit of 5	GFC-2-K5	**4.43**
	Service Kit for SRi/SRI-W	SRI-416	**POA**

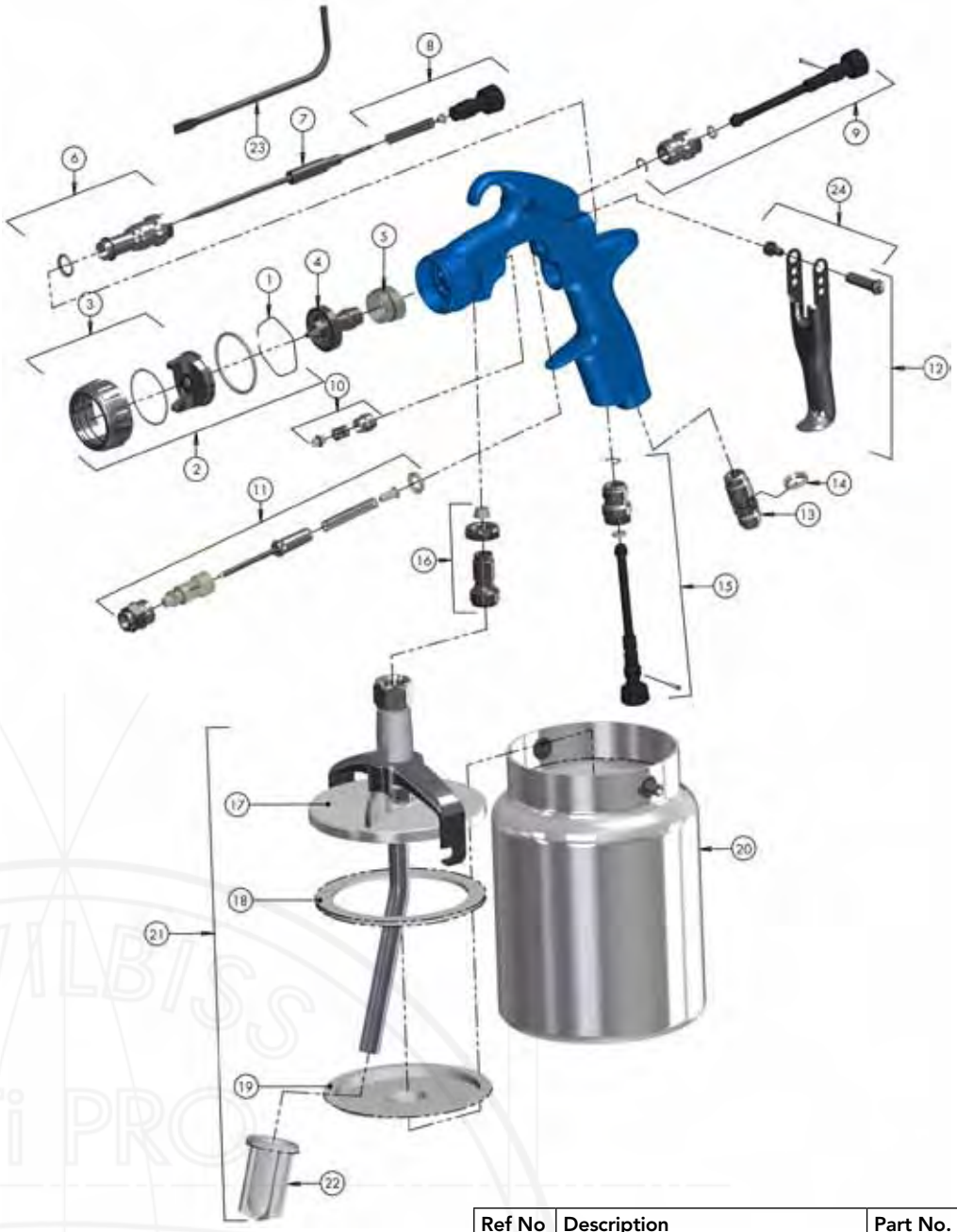

Ref No	Description	Part No.	Price €
1	Air Cap Retaining Clip	JGA-156-K5	**20.39**
2	Suction Feed Trans-tech® Aircap	VRIPRO-100-TV1-K	**139.05**
	Pressure Feed Trans-tech® Aircap	VRIPRO-100-TV2-K	**139.05**
3	Air Cap Retaining Ring & Seals	ADV-403-K	**56.24**
4	Fluid Tip - 0.85,14, 16, 18	SP-200S-**-K	**POA**
5	Separator	SP-626-K5	**22.45**
6	Body Bushing & Seal	SN-6-K	**40.07**
7	Fluid Needle - 0.85, 1.4, 1.6, 1.8 mm	ADV-310-**-K	**31.52**
8	Fluid Adjusting Knob, Spring & Pad Kit	ADV-6-K	**17.51**
9	Spreader Valve Assembly	ADV-401-K	**68.80**
10	Packing, Spring & Packing Nut Kit	SN-404-K	**14.32**
11	Air Valve Replacement Kit	SN-402-K	**87.24**
12	Trigger, Stud & Screw Kit	SN-63-K	**19.36**

Ref No	Description	Part No.	Price €
13	Air Inlet	SN-9-K	**19.36**
14	Colour ID Ring Kit (4 Colours)	SN-26-K4	**2.78**
15	Airflow Valve	ADV-401-K	**68.80**
16	Fluid Inlet Connector and seal	ADV-7-K	**19.26**
17	Cup lid assembly	KR-4001-B	**74.06**
18	Lid Gasket - kit of 3	KR-11-K3	**6.49**
19	Drip free diaphragm - kit of 5	KR-115-K5	**8.14**
20	Cup	KR-466-K	**58.30**
21	Complete cup	KR-566-1-B	**109.18**
22	Filter	KR-484-K10	**39.86**
23	Torx Key	SPN-8-K2	**9.89**
24	Trigger Stud & Torx Screw (kit of 5)	SN-405-K5	**66.95**
Service Parts			
	Spray Gun repair kit	PRO-415-1	**33.99**
	Seal and Pin Kit, kit of 5	GTI-428-K5	**24.72**

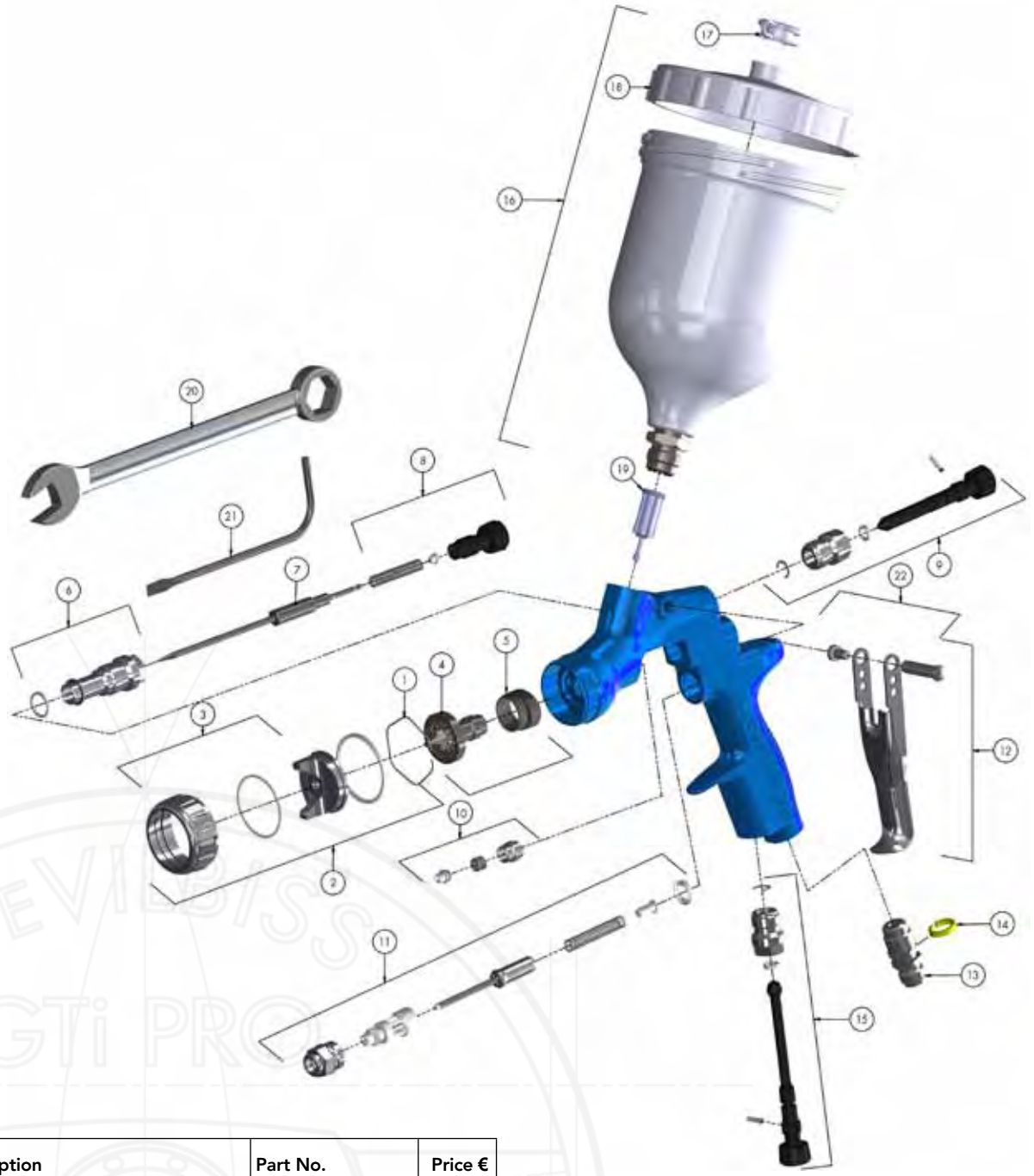

Ref No	Description	Part No.	Price €
1	Air Cap Retaining Clip	JGA-156-K5	**20.39**
2	Gravity Feed Trans-tech® Air Cap	VRIPRO-100-TV1-K	**139.05**
3	Air Cap Retaining Ring & Seals	ADV-403-K	**56.24**
4	Fluid Tip 12 or 13	SP-200S-XX-K	**100.73**
5	Separator	SP-626-K5	**22.45**
6	Body Bushing & Seal	SN-6-K	**40.07**
7	Fluid Needle 12 or 13	ADV-310-**-K	**31.52**
8	Fluid Adjusting Knob, Spring & Pad Kit	ADV-6-K	**17.51**
9	Spreader Valve Assembly	ADV-402-K	**27.50**
10	Packing, Spring & Packing Nut Kit	SN-404-K	**14.32**
11	Air Valve Replacement Kit	SN-402-K	**87.24**
12	Trigger, Stud & Screw Kit	SN-63-K	**19.36**
13	Air Inlet	SN-9-K	**19.36**

Ref No	Description	Part No.	Price €
14	Colour ID Ring Kit (4 Colours)	SN-26-K4	**2.78**
15	Airflow Valve	ADV-401-K	**68.80**
16	Gravity Cup Kit	GFC-501	**43.78**
17	Drip Check Lid (kit of 5)	GFC-2-K5	**4.43**
18	Gravity Cup Lid	GFC-402	**3.40**
19	Filter	KGP-5-K5	**7.11**
20	Spanner, Torx, Brush & ID Rings	SN-406	**19.36**
21	Torx Key	SPN-8-K2	**9.89**
22	Trigger Stud & Torx Screw (kit of 5)	SN-405-K5	**66.95**
Service Parts			
	Spray Gun repair kit	PRO-415-1	**33.99**
	Seal and Pin Kit, kit of 5	GTI-428-K5	**24.72**

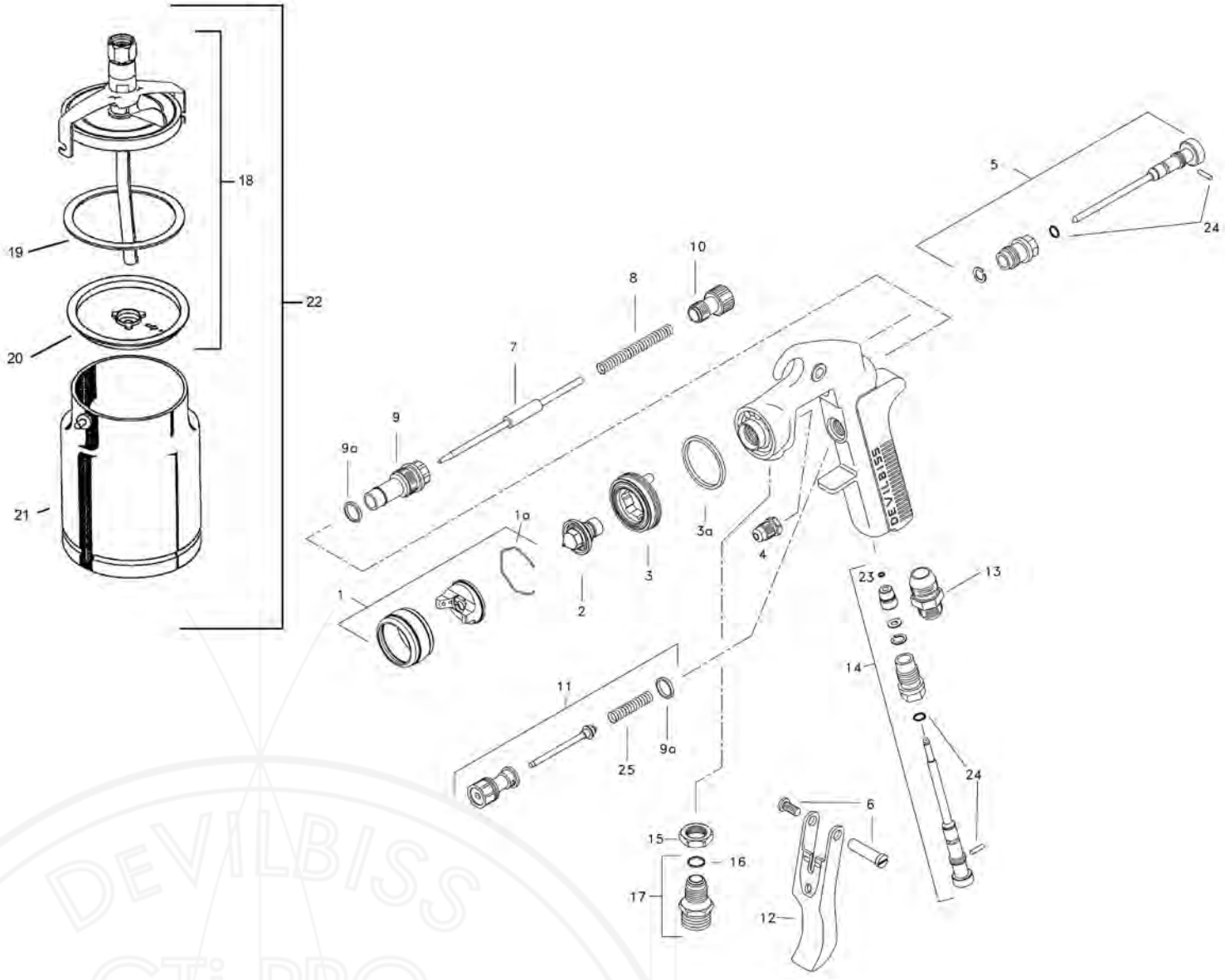

Ref. No	Description	Part No.	Price €
1	Air Cap/Retaining ring (* = 186+ or 30+)	AV-4239-***	**POA**
1a	Spring Clip - Kit of 5	JGA-156-K5	**20.39**
2	Tip (* = EX-1.8mm, FF-1.4mm, FW-1.6mm)	AV-645-*	**POA**
3	Baffle & Seal	JGD-402-K	**50.68**
3a	Baffle seal - Kit of 5	GTI-33-K5	**27.60**
4	Packing	GTi-445-K2	**42.72**
5	Spreader Valve	GTI-405-K	**32.64**
6	Stud and Screw	GTI-408-K5	**86.64**
7	Needle (*= DEX, FF or FW)	JGA-421-**-K	**POA**
8	Spring - Kit of 5	GTI-409-K5	**23.88**
9	Bushing	JGA-17	**22.15**
9a	Seal - Kit of 5	JGS-72-K5	**8.65**
10	Needle Adjusting Screw	GTI-414-K	**30.12**
11	Valve Assembly	JGK-449-K	**92.48**

Ref. No	Description	Part No.	Price €
12	Trigger	GTI-108	**22.66**
13	Connector	JGA-158	**12.98**
14	Airflow Valve	GTI-415-K	**76.56**
15	Lock Nut - Kit of 5	JGA-51-K5	**13.80**
16	Seal	23165-001	**2.58**
17	Fluid Inlet Connector and seal	JGA-159-K	**12.77**
18	Cup lid assembly	KR-4001-B	**74.06**
19	Lid Gasket - kit of 3	KR-11-K3	**6.49**
20	Drip free diaphragm - kit of 5	KR-115-K5	**8.14**
21	Cup	KR-466-K	**58.30**
22	Complete cup	KR-566-1-B	**109.18**
23	Circlip	25746-007-K5	**20.39**
24	Seal & Pin Kit (+ SST-8434-K5)	GTI-428-K5	**24.72**
25	Spring	JGV-262-K5	**15.12**

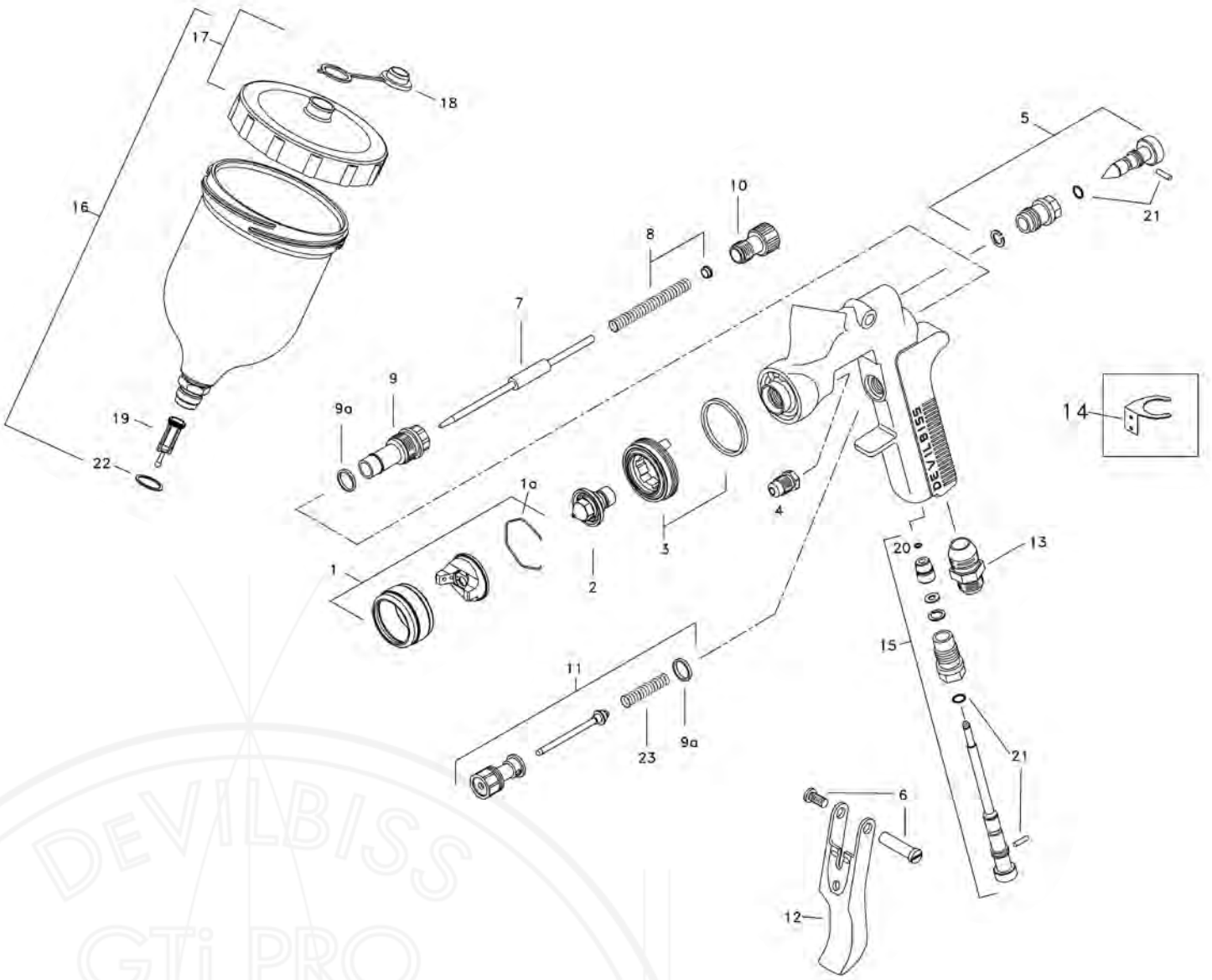

Ref No	Description	Part Number	Price €
1	Air Cap/Retaining ring * = 186 or 30	AV-4239-**	**POA**
1a	Spring Clip	JGA-156-K5	**20.39**
2	Tip (* = EX-1.8mm, FF-1.4mm, FW-1.6mm)	AV-645-*	**POA**
3	Baffle & Seal	JGD-402-K	**50.68**
4	Packing (kit of 2)	GTi-445-K2	**42.72**
5	Spreader Valve	GTI-404-K	**32.64**
6	Stud and Screw	GTI-408-K5	**86.64**
7	Needle (* = DEX or FF)	JGA-421-*-K	**POA**
8	Spring	GTI-409-K5	**23.88**
9	Bushing	JGA-17	**22.15**
9a	Seal - kit of 5	JGS-72-K5	**8.65**
10	Needle Adjusting Screw	GTI-414-K	**30.12**
11	Valve Assembly	JGK-449-K	**92.48**

Ref No	Description	Part Number	Price €
12	Trigger	GTI-108	**22.66**
13	Connector 1/4	JGA-158	**12.98**
14	Gun Hook	GFG-6	**11.43**
15	Airflow Valve	GTI-415-K	**76.56**
16	1/2 Ltr Gravity Cup Kit	GFC-501	**43.78**
17	Cup Lid	GFC-402	**3.40**
18	Drip Check Lid kit of 5	GFC-2-K5	**4.43**
19	Filter	KGP-5-K5	**7.11**
20	Circlip	25746-007-K5	**20.39**
21	Seal & Pin Kit	GTI-428-K5	**24.72**
22	Washer	GFC-17-K5	**0.82**
23	Spring	JGV-262-K5	**15.12**

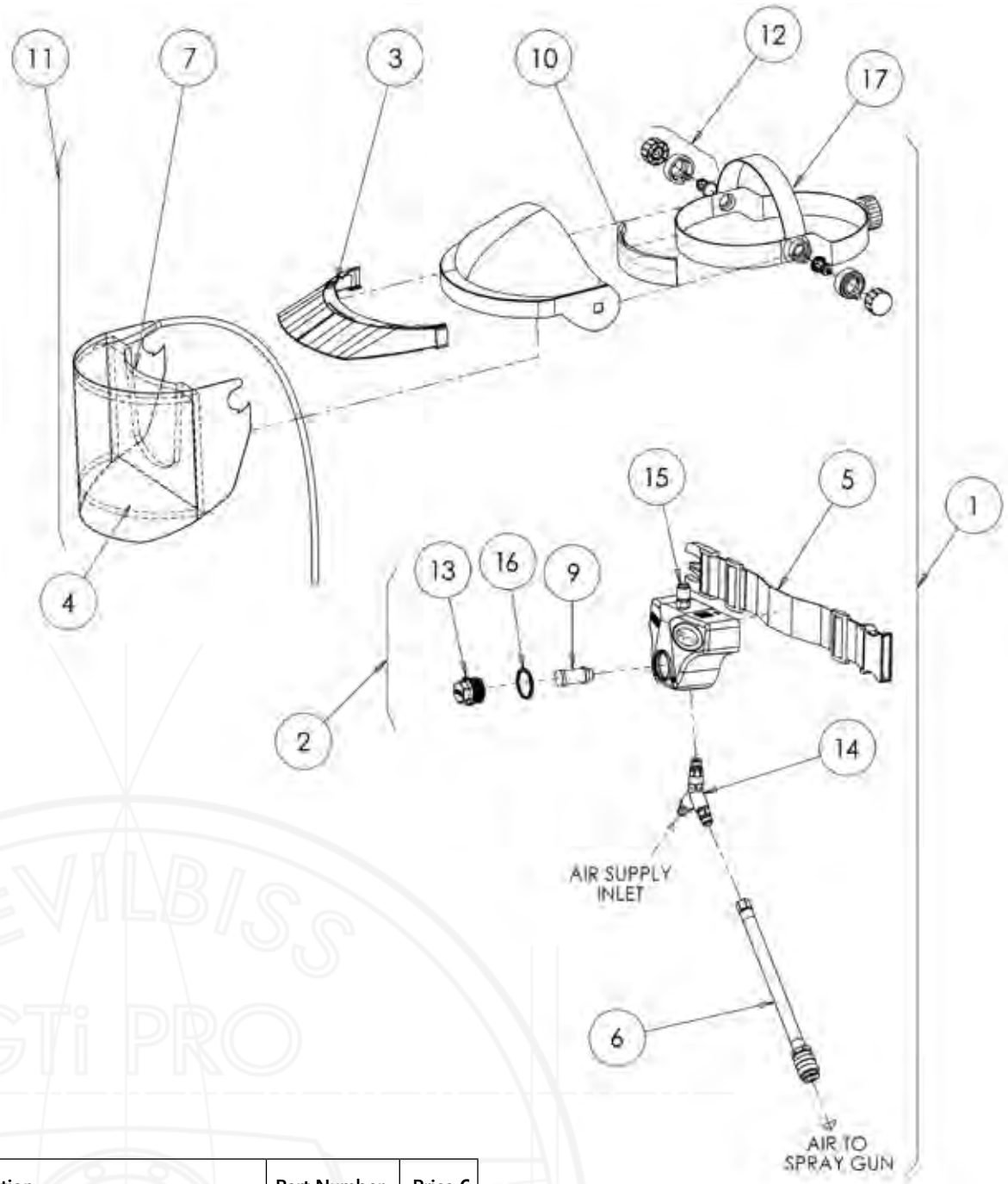

Ref No	Description	Part Number	Price €
1	Pro Visor complete unit	-	-
2	Belt & Regulator	PROV-20-K	**235.87**
3	Peak	PROV-21-K	**20.81**
4	Tear-off visors pack of 10	PROV-22-K10	**20.81**
	Tear-off visors pack of 50	PROV-22-K50	**80.96**
5	Belt and buckle assembly	PROV-51-K	**53.56**
6	1.2m Hose (To Spray Gun)	PROV-406-K	**90.13**
7	Rigid acetate visor face seal and air tube	PROV-25-K	**119.48**
8	Storage bag	PROV-26-K	**26.68**
9	Filter element (pack of 4)	PROV-27-K4	**106.09**
10	Lint-free brow band kit	PROV-52-K2	**31.62**

Ref No	Description	Part Number	Price €
11	Visor head piece & breathing air tube	PROV-29-K	**233.81**
12	Spacer, stud & knob (set of all sizes)	PROV-30-K	**35.43**
13	Filter cap & seal	PROV-31-K	**26.68**
14	Y-Piece Assembly	PROV-32-K	**80.24**
15	Connector	PROV-33-K	**39.55**
16	Filter Cap Seal	PROV-34-K4	**24.93**
17	Visor head piece & breathing air tube	PROV-41-K	**POA**
Hoses			
	10m Air hose - 5/16"ID male & female QD's	H-6085-QD	**139.05**
	10m Air hose - 5/16"ID	H-6065	**74.06**

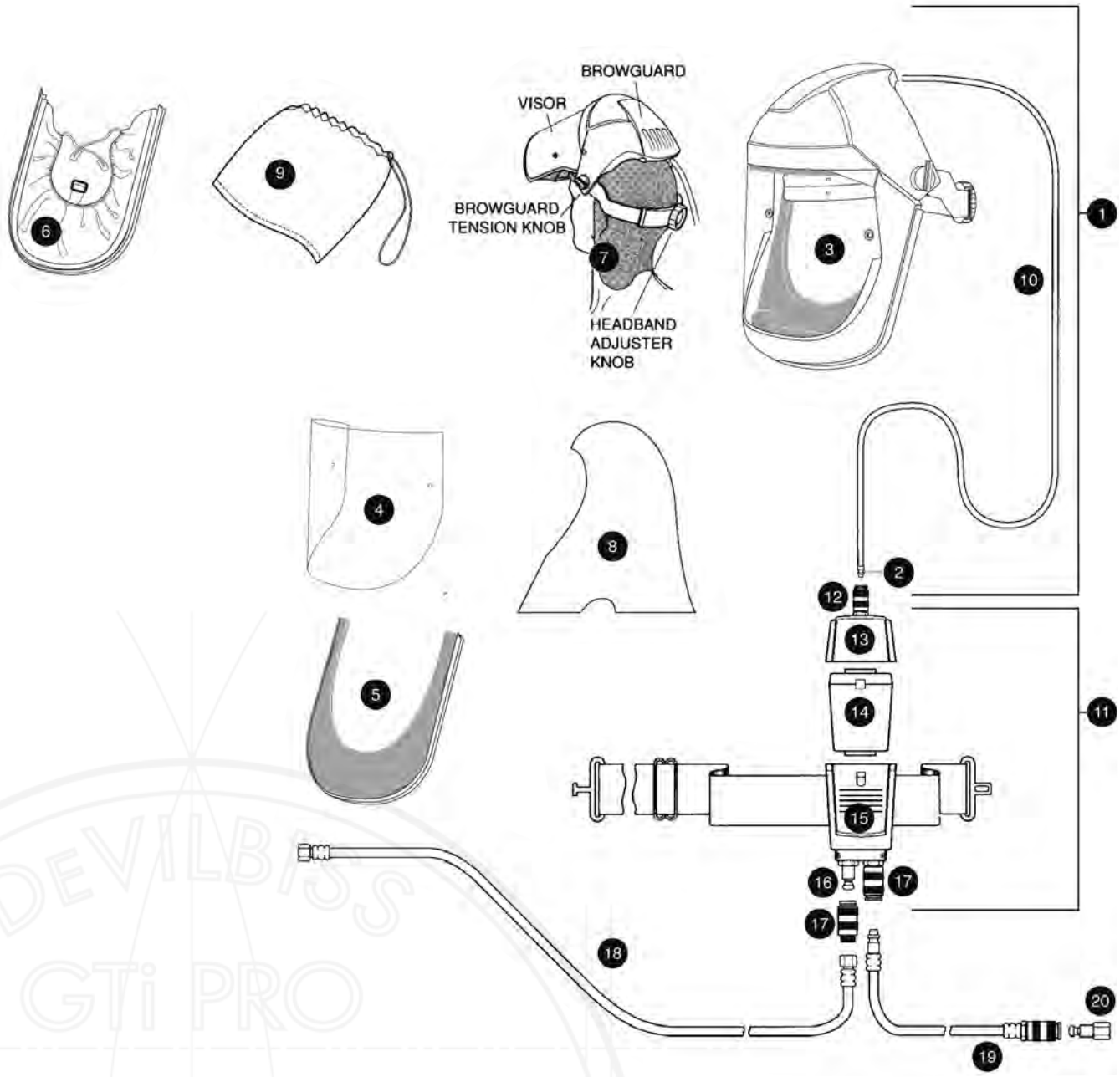

Ref No	Description	Part Number	Price €
1	Visor Assembly (Ref Nos 2-10)	MPV-526	-
2	Quick Detachable Stem	MPV-20	**10.61**
3	Clear Visor (kit of 5)	MPV-478-K5	**209.09**
4	Visor Covers (kit of 10)	MPV-44-K10	**29.56**
5	Face Cartridge — Foam (kit of 5)	MPV-476-K5	**155.53**
6	Face Cartridge — Synthetic (kit of 5)	MPV-477-K5	**160.68**
7	Neck Covers (kit of 5)	MPV-24-K5	**218.36**
8	Hoods (kit of 5)	MPV-2-K5	**76.32**
9	Stowage Bag	MPV-458	**15.55**
10	Tube and Diffuser Assembly	MPV-457	**78.90**
11	Waistbelt Assembly	MPV-518	**420.24**

Ref No	Description	Part Number	Price €
12	Quick Detachable Connector	MPV-442	**34.20**
13	Regulator and Housing	MPV-455	**156.56**
14	Disposable Filter	MPV-22	**129.78**
15	Waistbelt and Filter Housing	MPV-519	**69.53**
16	Quick Detachable Stem	MPV-10	**12.77**
17	Quick Detachable Connector	MPV-424	**51.29**
18	10m length M-F QD Fittings	H-6085-QD	**139.05**
	10m length 1/4" Re-usable Fittings	H-6065	**74.06**
19	Gun Hose Assembly	MPV-456	**81.89**
20	Quick Detachable Stem	MPV-5	**11.12**

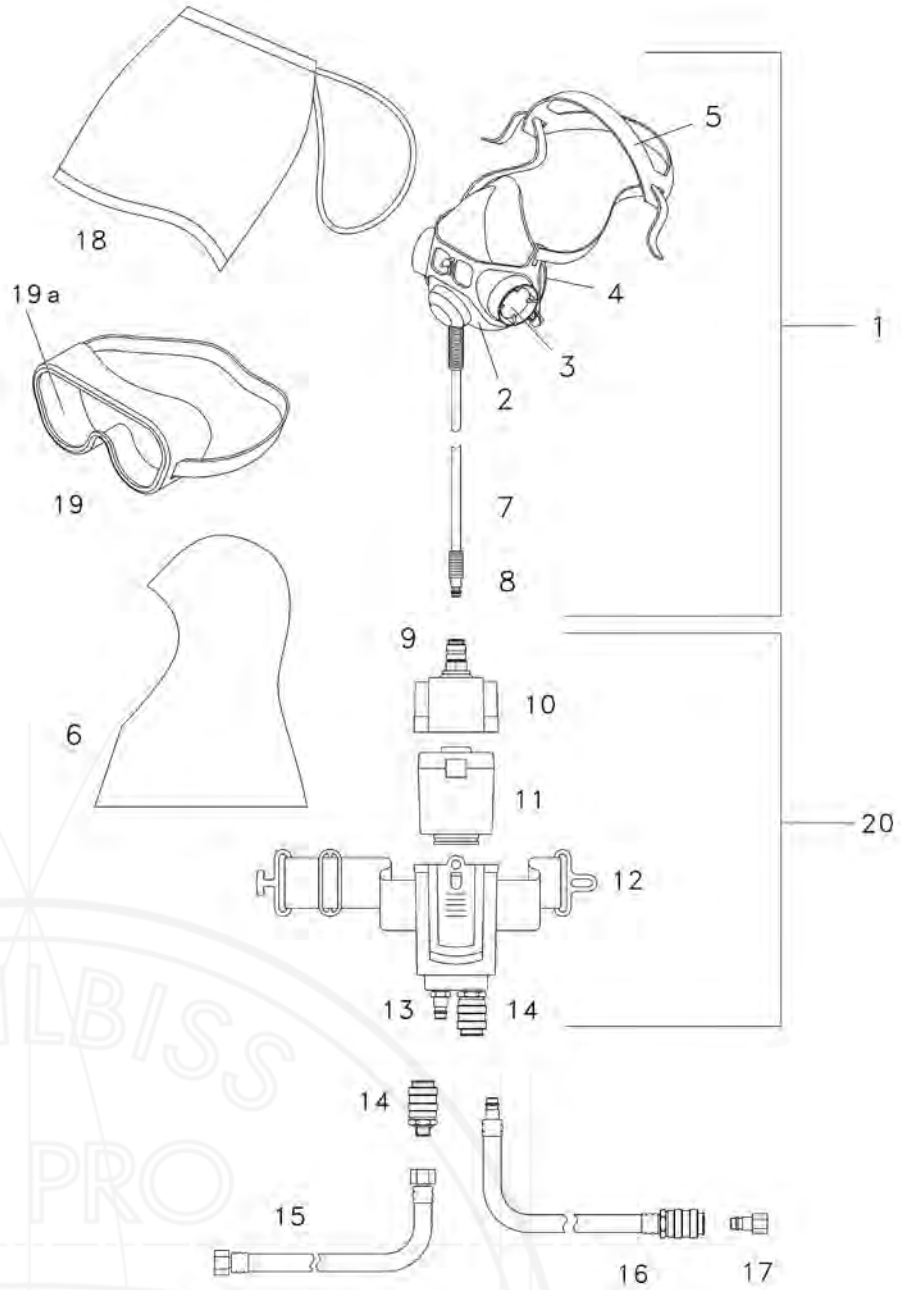

Ref No	Description	Part No.	Price €
1	Mask Assembly (ref nos 2-8)	MPV-506-2	**161.71**
2	Facepiece	MPV-486	**32.03**
3	Exhalation Valve (kit of 2)	MPV-489-K2	**40.79**
4	Kit of 10 cotton rimlets	MPV-17-K10	**41.20**
5	Harness	MPV-487	**22.15**
6	Hoods (kit of 5)	MPV-2-K5	**76.32**
7	Tube and mask diffuser assembly	MPV-488	**76.32**
8	Quick detachable stem	MPV-20	**10.61**
9	Quick detachable connector	MPV-442	**34.20**
10	Regulator and housing	MPV-455	**156.56**
11	Disposable filter	MPV-22	**129.78**
12	Waistbelt & filter housing	MPV-519	**69.53**

Ref No	Description	Part No.	Price €
13	Quick detachable stem	MPV-10	**12.77**
14	Quick detachable connector	MPV-424	**51.29**
15	10m length M-F QD Fittings #	H-6085-QD	**139.05**
	10m length 1/4" Re-usable Fittings #	H-6065	**74.06**
16	Gun hose assembly	MPV-456	**81.89**
17	Quick detachable stem	MPV-5	**11.12**
18	Stowage bag	MPV-458	**15.55**
19	Goggle	MPV-4006	**35.74**
19a	Goggle protection strip (kit of 10)	MPV-59-K10	**18.03**
20	Waistbelt assembly	MPV-518	**420.24**
# Not part of outfit, order separately			

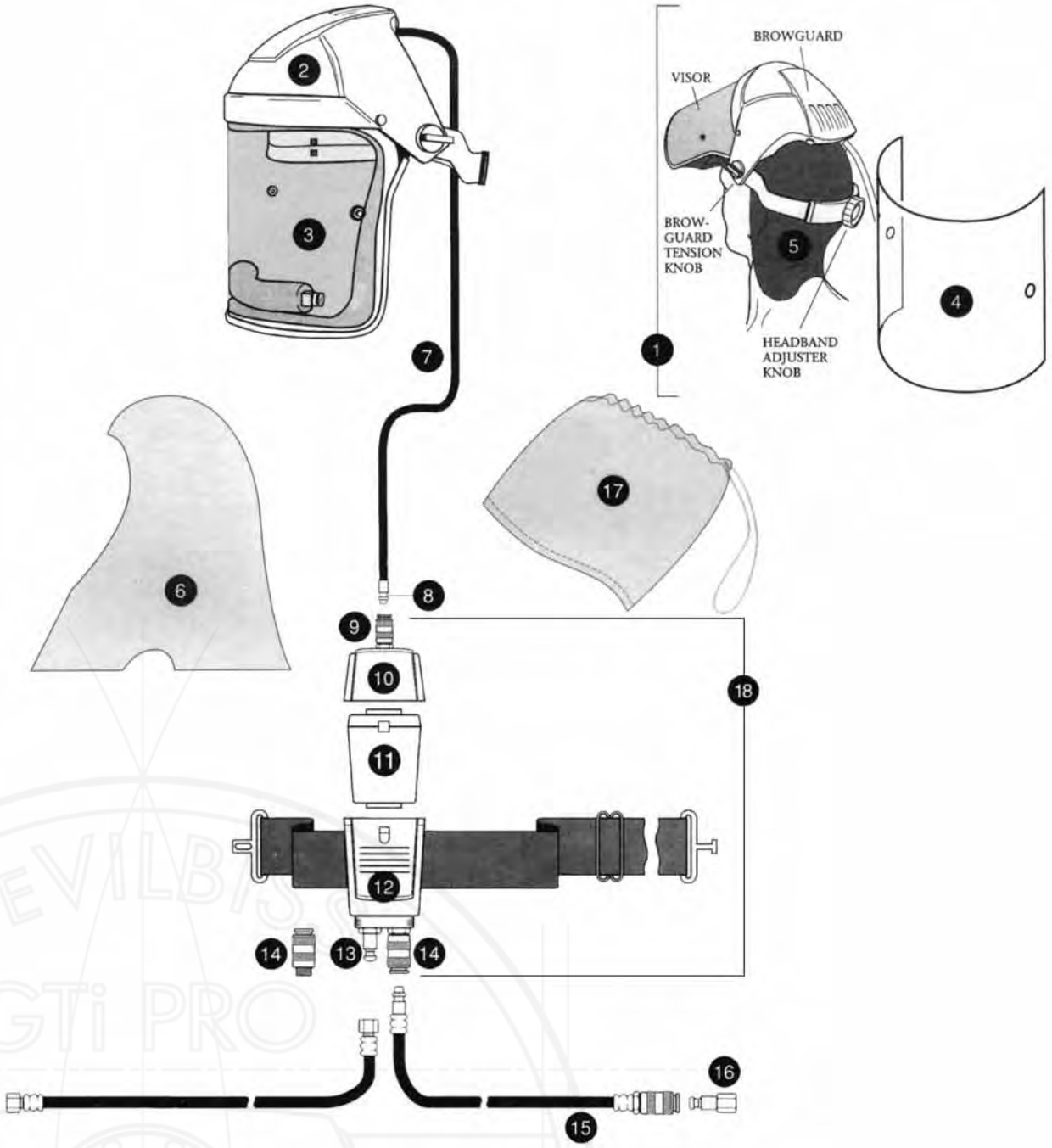

Ref No	Description	Part Number	Price €
1	Face mask assembly (Ref Nos 2-8)	MPV-517	**200.85**
2	Browguard assembly	MPV-453	**40.38**
3	Face mask & seal assembly	MPV-454	**90.85**
4	Kit of 10 face mask covers	MPV-1-K10	**29.56**
5	Kit of 5 neck covers	MPV-24-K5	**218.36**
6	Kit of 5 hoods	MPV-2-K5	**76.32**
7	Tube and diffuser assembly	MPV-457	**78.90**
8	Quick detachable stem	MPV-20	**10.61**
9	Quick detachable connector	MPV-442	**34.20**

Ref No	Description	Part Number	Price €
10	Regulator and housing	MPV-455	**156.56**
11	Disposable filter	MPV-22	**129.78**
12	Waistbelt and filter housing	MPV-519	**69.53**
13	Quick detachable stem	MPV-10	**12.77**
14	Quick detachable connector	MPV-424	**51.29**
15	Gun hose assembly	MPV-456	**81.89**
16	Quick detachable assembly	MPV-5	**11.12**
17	Stowage bag	MPV-458	**15.55**
18	Waistbelt assembly	MPV-518	**420.24**

UK - 2020 DEVILBISS AUTOMOTIVE REFINISH Europartners Price List

Item No.	Description	Sales Code	Price €
704400	DV1 SPRAY HEAD KIT	B10	**43.26**
704401	DV1 GASKET (KIT OF 2)	B10	**3.09**
704402	DV1 DEFLECTOR PLATE	B10	**4.33**
704403	DV1 SCREW (KIT OF 3)	B10	**3.71**
704404	DV1 FLUID (NEEDLE) ADJUSTING KNOB KIT	B10	**12.36**
704406	DV1 TRIGGER, STUD, SPRING & SCREW KIT	B10	**24.72**
704407	DV1-B HVLP AIR CAP & RETAINING RING	B10	**97.64**
704408	DV1-B PLUS HVLP AIR CAP & RETAINING RING	B10	**97.64**
704409	DV1 FLUID TIP (0.9)	B10	**71.69**
704410	DV1 FLUID TIP (1.0)	B10	**71.69**
704411	DV1 FLUID TIP (1.1)	B10	**71.69**
704412	DV1 FLUID TIP (1.2)	B10	**71.69**
704413	DV1 FLUID TIP (1.3)	B10	**71.69**
704414	DV1 FLUID TIP (1.4)	B10	**71.69**
704415	DV1 FLUID TIP (1.5)	B10	**71.69**
704416	DV1 FLUID NEEDLE	B10	**22.25**
704417	DV1 INLINE FLOW VALVE	B10	**55.62**
704418	DV1 SPREADER VALVE ASSEMBLY (NON DIGITAL)	B10	**37.08**
704419	DV1 SPREADER CONTROL KNOB (NON DIGITAL)	B10	**11.12**
704420	DV1 DIGITAL GAUGE SPREADER VALVE	B10	**49.44**
704421	DV1 DIGITAL GAUGE KNOB AND SCREW KIT	B10	**11.12**
704422	DV1 AIR VALVE FRONT CAGE ASSEMBLY	B10	**37.08**
704423	DV1 REAR SEAL ASSEMBLY	B10	**24.72**
704424	DV1 AIR VALVE ASSEMBLY	B10	**67.98**
704425	DV1 RETAINING RING SUB ASSEMBLY	B10	**30.90**
704426	DV1 DIGITAL GAUGE ASSEMBLY	B10	**184.16**
704428	DV1 IDENTIFICATION SLEEVE KIT	B10	**23.48**
704429	DV1 TOOL KIT	B10	**14.83**
704430	DV1 MINOR SERVICE KIT	B10	**48.20**
704431	DV1 MAJOR SERVICE KIT	B10	**85.28**
2101004	ADAPTOR M/M 1/4"BSPF	D2	**2.68**
2101005	1/4BSP X 3/8BSP MALE NIPPLE	C2	**2.88**
2101007	NIPPLE 3/8" - 3/8"	D2	**3.71**
2113002	F/F/M TEE FITTING 1/4 BSP	J2	**10.71**
9351706	FILTER	J2	**42.23**
9351711	FILTER ELEMENT	J2	**134.93**
9450102	FILTER ELEMENT 20 MICRON	J2	**36.77**
9450301	FILTER BOWL & S/A DRAIN	J2	**48.41**
9450304	SEMI-AUTO DRAIN	J2	**31.00**
9450802	UPPER COVER - REGULATOR	J2	**65.92**
114-01310	SPRAY TIP .013" x 8"-10"FAN,50°	C2	**107.12**
114-01510	SPRAY TIP .015" x 8"-10"FAN,50°	C2	**107.12**
2207-18	PACKING GLAND	B1	**12.05**
2207-438	AIR VALVE NEEDLE ASSEMBLY	B1	**29.77**
23165-001	PTFE SEAL 7/16"OD X 1/32"SQ.	B1	**2.58**
25746-007-K5	RETAINING RING (PACK OF 5)	B1	**20.39**
4900-5-1-K3	CLEANING BRUSHES - KIT OF 3	B1	**12.36**
54-4458	GRAVITY FEED CUP ASM-4OZ	B1	**82.81**
7000-114-K2	VISCOSITY CUPS (FORD 4)	B1	**20.81**
83-2727	GAUGE-100# (BOTTOM)	D2	**44.29**
83-4233	D.M. NIPPLE 1/4" X 3/8"	D2	**3.61**
83C-210-B	2.8 US GAL P.F.TANK-1reg	D1	**775.59**
85-452	REGULATOR ASSEMBLY	D2	**135.96**
AC-12	COALESCER CARBON FILT.ELEMENT	J2	**180.25**
AD-11	NIPPLE 3/8"NPSM X 3/8"NPT	C2	**8.14**
ADV-310-085-K	FLUID NEEDLE 085	B1	**31.52**
ADV-310-10-K	FLUID NEEDLE 10	B1	**31.52**
ADV-310-12-K	FLUID NEEDLE 12	B1	**31.52**
ADV-310-13-K	FLUID NEEDLE 13	B1	**31.52**
ADV-310-14-K	FLUID NEEDLE 14	B1	**31.52**
ADV-310-16-K	FLUID NEEDLE 16	B1	**31.52**
ADV-310-18-K	FLUID NEEDLE 18	B1	**31.52**
ADV-310-20-K	FLUID NEEDLE 20	B1	**31.52**
ADV-310-22-K	FLUID NEEDLE 22	B1	**31.52**
ADV-401-K	AIRFLOW VALVE/SPREADER Pr/Suc	B1	**68.80**
ADV-402-K	SPREADER VALVE (GRAVITY)	B1	**27.50**
ADV-403-K	RETAINING RING WITH SEALS	B1	**56.24**
ADV-6-K	NEEDLE ADJUSTING SCREW KIT	B1	**17.51**
ADV-7-K	FLUID INLET CONNECTOR KIT	B1	**19.26**
AGG-89-K5	FLUID TIP GASKET KIT	B2	**13.80**
AV-1239-4UZ	AIR CAP 4UZ	B1	**114.33**
AV-4239-186	AIR CAP/RETAINING RING 186	B1	**125.66**
AV-4239-30	NEW "30" AIR CAP/RET.RING	B1	**125.66**
AV-4239-43	AIR CAP/RETAINING RING	B1	**125.66**
AV-4239-765	AIR CAP/RETAINING RING	B1	**125.66**
AV-645-D	2.2 FLUID TIP - PACKED	B1	**111.24**
AV-645-EX	1.8 FLUID TIP - PACKED	B1	**111.24**
AV-645-FF	1.4 FLUID TIP - PACKED	B1	**111.24**
AV-645-FW	1.6 FLUID TIP - PACKED	B1	**111.24**
AV-645-FX	1.1 FLUID TIP - PACKED	B1	**111.24**
DB-40003	DISPLAY BOARD.10 X KR-11-K3	D2	**140.08**
DB-40007	DISPLAY BOARD.10 X KR-484-K2	D2	**235.87**
DB-40014	DISPLAY BOARD.10 X GL-1-K10	B1	**199.82**
DB-40015	DISPLAY BOARD.8 X GTI-445-K2	B1	**130.81**
DB-424	DISPLAY BOARD.6 X KR-115-K5	B1	**100.73**
DB-426	DISPLAY BOARD.10x4900-5-1-K3	B1	**170.98**
DC-ASW-K12	ANTI STATIC WIPER - KIT OF 12	L	**37.60**
DC-BPP-K12	BUMPER PREP PAD - KIT OF 12	L	**59.43**
DC-OV-L	DEVILBISS COVERALLS, LARGE	J1	**47.07**
DC-OV-M	DEVILBISS COVERALLS, MEDIUM	J1	**47.07**
DC-OV-XL	DEVILBISS COVERALLS, X-LARGE	J1	**47.07**
DC-OV-XXL	DEVILBISS COVERALLS, XX-LARGE	J1	**47.07**
DEV-FHAZ1011	PROCLEAN GUN WASH MACHINE	J1	**1,491.44**
DEV-FHFZ1004	JETCLEAN H2O AEROSOL x 12	J2	**189.52**
DEV-FHFZ1005	CONVERSION KIT - SMALL GUNS	J2	**173.04**
DEV-FHFZ1013	JETCLEAN SOLVENT AEROSOL (x12)	J2	**189.52**
DEV-FYYY1094	SPRAY GUN AIR TUBE - PROCLEAN	J2	**147.29**
DGI-402-K	SWIVEL NUT ASSEMBLY PACK	B1	**29.15**
DGI-415-K	DIGITAL GAUGE SEAL KIT	B1	**12.77**
DGIPRO-503-BAR-K	GUN MOUNTED DGI GAUGE & VALVE	B1	**202.91**
DGIPRO-504-BAR-K	BOXED DIGITAL PRESS GAUGE FOR PROLITE GRAVITY ONLY	B1	**202.91**
DGR-101	CROWN CAP	B1	**11.95**
DGR-103-35	AIR CAP (FOR .35mm NOZZLE)	B1	**18.75**
DGR-104	HEAD CAP	B1	**8.76**
DGR-105-35	NOZZLE (.35mm)	B1	**65.41**
DGR-106K	PACKING & NUT ASSEMBLY	B1	**10.09**
DGR-107	AIR VALVE CASING	B1	**10.51**
DGR-108K	AIR VALVE KIT*	B1	**32.96**
DGR-110K	NEEDLE GUIDE,ROCKER & SPRING	B1	**13.49**
DGR-111	SPRING GUIDE	B1	**7.73**
DGR-112	NEEDLE LOCKNUT	B1	**14.32**
DGR-113-35	NEEDLE (FOR .35mm NOZZLE)	B1	**31.00**
DGR-114	CUTAWAY HANDLE W/PRESET	B1	**30.59**
DGR-116	PRESET NEEDLE KNOB	B1	**9.27**
DGR-117	1/4 OZ (7cc) CUP & LID	B1	**45.22**
DGR-118	1/3 OZ (9cc) CUP & LID	B1	**45.22**
DGR-119	1/2 OZ (14cc) CUP & LID	B1	**51.29**
DGR-120	CUP LID	B1	**7.93**
DGR-121K	DAGR REPAIR KIT	B1	**25.96**
DGR-123	10' BRAIDED AIR HOSE	B1	**37.60**
DGR-124	10' BRAIDED AIR HOSE WITH QD	B1	**72.10**
DGR-125	20' BRAIDED AIR HOSE	B1	**43.98**
DGR-126	20' BRAIDED AIR HOSE WITH QD	B1	**86.01**
DGR-127	QUICK DISCONNECT SET	B1	**37.29**
DGR-128-K2	QUICK DISCONNECT ADAPTORS	B1	**11.02**
DGR-129	ADAPTOR - PAASCHE	B1	**8.24**
DGR-12-K5	AIR VALVE WASHER KIT	B1	**13.60**
DGR-130	REG,GAUGE & MOISTURE	B1	**110.21**
DGR-131	ADAPTOR - BADGER	B1	**12.36**
DGR-132	AIRBRUSH HOLDER	B1	**38.42**
DGR-18-K5	O-RING (PACK OF 5)	B1	**13.60**
DGR-308K	AIR VALVE KIT	B1	**32.86**
DGR-323	TRIGGER	B1	**16.38**
DGR-501G-35	DAGR AIRBRUSH	A4	**249.26**
DMG-501-K	DRYNAMIC GUN ASSY	J1	**100.84**
DMG-520-K	BOXED AIR DRYER STAND GEN ASSY	J2	**247.20**
DMG-5-K3	DRYER INLET FILTERS (3 PACK)	J2	**41.20**
DMG-620	AIR DRYER STAND/2 DRYERS KIT	J1	**392.43**
DPC-10	ADAPTOR FOR SATA (DeKup)	K	**18.03**
DPC-11	ADAPTOR FOR IWATA (DeKup)	K	**18.03**
DPC-13	ADAPTOR FOR SAGOLA (DeKup)	K	**18.03**
DPC-22-K3	FUNNELS (PACK OF 3)	K	**18.13**
DPC-23	9 OZ ADAPTOR (SRI, SRIPRO)	K	**18.03**
DPC-27-K10	FILTER, STICK (PACK OF 10)	K	**18.03**
DPC-42-K24	FILTER, DISC 125µ(PACK OF 24)	K	**17.10**
DPC-501	ADAPTOR FOR SATA QCC (DeKup)	K	**18.03**
DPC-502	ADAPTOR FOR SATA QCC MINI	K	**24.21**
DPC-503-K24	3 OZ DISPOSABLE CUP/LID	K	**39.55**
DPC-504	ADAPTOR FOR SATA QCC FULL SIZE	K	**25.75**
DPC-601	24 OZ DISPOSABLE CUPS/LIDS	K	**53.87**
DPC-602	9 OZ DISPOSABLE LIDS/LINERS	K	**53.87**
DPC-606	24 OZ DeKUP RE-USABLE KIT (x2)	K	**22.04**
DPC-607	9 OZ DeKUP RE-USABLE KIT	K	**18.33**
DPC-60-K10	9 OZ MEASURING GUIDE (10 PACK)	K	**19.98**
DPC-62-K10	MIXING GUIDES (2:1 & 3:1)	K	**18.23**
DPC-63-K10	MIXING GUIDES (4:1 & 5:1)	K	**18.23**
DPC-65-K24	9 OZ 125µ DISC FILTER(24 PACK)	K	**21.73**
DPC-66-K24	FILTER DISC 200µ (PACK OF 24)	K	**17.10**
DPC-67-K24	9 OZ 200µ DISC FILTER(24 PACK)	K	**21.63**
DPC-6-K10	PLUGS, DeKup (PACK OF 10)	K	**2.88**
DPC-78	ADAPTOR FOR IWATA SUPERNOVA	K	**18.03**
DPC-80	ADAPTOR FOR DEVILBISS (DeKup)	K	**18.03**
DPC-81	ADAPTOR FOR SLG	K	**18.03**
DPC-8-K2	CLEANING BOTTLE KIT OF 2	K	**16.17**
DV1-C-000-10-C1+	DV1 CLEARCOAT GRAVITY GUN & CU	A10	**595.00**
DV1-C-000-11-B	DV1 GRAVITY GUN & CUP KIT	A10	**612.85**
DV1-C-000-11-B+	DV1 GRAVITY GUN & CUP KIT	A10	**612.85**
DV1-C-000-11-C1+	DV1 CLEARCOAT GRAVITY GUN & CU	A10	**595.00**
DV1-C-000-12-B	DV1 GRAVITY GUN & CUP KIT	A10	**612.85**
DV1-C-000-12-B+	DV1 GRAVITY GUN & CUP KIT	A10	**612.85**
DV1-C-000-12-C1+	DV1 CLEARCOAT GRAVITY GUN & CU	A10	**595.00**
DV1-C-000-13-B	DV1 GRAVITY GUN & CUP KIT	A10	**612.85**
DV1-C-000-13-B+	DV1 GRAVITY GUN & CUP KIT	A10	**612.85**
DV1-C-000-13-C1+	DV1 CLEARCOAT GRAVITY GUN & CU	A10	**595.00**
DV1-C-000-14-B+	DV1 GRAVITY GUN & CUP KIT	A10	**612.85**
DV1-C-000-14-C1+	DV1 CLEARCOAT GRAVITY GUN & CU	A10	**595.00**
DV1-C-000-15-B+	DV1 GRAVITY GUN & CUP KIT	A10	**612.85**
DV1-C-BAR-10-C1+	DV1 CLEARCOAT DIGI GRAVITY GUN	A10	**670.00**
DV1-C-BAR-11-B	DV1 DIGI GRAVITY GUN & CUP KIT	A10	**690.10**
DV1-C-BAR-11-B+	DV1 DIGI GRAVITY GUN & CUP KIT	A10	**690.10**
DV1-C-BAR-11-C1+	DV1 CLEARCOAT DIGI GRAVITY GUN	A10	**670.00**

DV1-C-BAR-12-B	DV1 DIGI GRAVITY GUN & CUP KIT	A10	**690.10**
DV1-C-BAR-12-B+	DV1 DIGI GRAVITY GUN & CUP KIT	A10	**690.10**
DV1-C-BAR-12-C1+	DV1 CLEARCOAT DIGI GRAVITY GUN	A10	**670.00**
DV1-C-BAR-13-B	DV1 DIGI GRAVITY GUN & CUP KIT	A10	**690.10**
DV1-C-BAR-13-B+	DV1 DIGI GRAVITY GUN & CUP KIT	A10	**690.10**
DV1-C-BAR-13-C1+	DV1 CLEARCOAT DIGI GRAVITY GUN	A10	**670.00**
DV1-C-BAR-14-B+	DV1 DIGI GRAVITY GUN & CUP KIT	A10	**690.10**
DV1-C-BAR-14-C1+	DV1 CLEARCOAT DIGI GRAVITY GUN	A10	**670.00**
DV1-U-000-10-C1+	DV1 CLEARCOAT GRAVITY GUN ONLY	A10	**580.00**
DV1-U-000-11-B	DV1 GRAVITY GUN ONLY KIT	A10	**597.40**
DV1-U-000-11-B+	DV1 GRAVITY GUN ONLY KIT	A10	**597.40**
DV1-U-000-11-C1+	DV1 CLEARCOAT GRAVITY GUN ONLY	A10	**580.00**
DV1-U-000-12-B	DV1 GRAVITY GUN ONLY KIT	A10	**597.40**
DV1-U-000-12-B+	DV1 GRAVITY GUN ONLY KIT	A10	**597.40**
DV1-U-000-12-C1+	DV1 CLEARCOAT GRAVITY GUN ONLY	A10	**580.00**
DV1-U-000-13-B	DV1 GRAVITY GUN ONLY KIT	A10	**597.40**
DV1-U-000-13-B+	DV1 GRAVITY GUN ONLY KIT	A10	**597.40**
DV1-U-000-13-C1+	DV1 CLEARCOAT GRAVITY GUN ONLY	A10	**580.00**
DV1-U-000-14-B	DV1 GRAVITY GUN ONLY KIT	A10	**597.40**
DV1-U-000-14-B+	DV1 GRAVITY GUN ONLY KIT	A10	**597.40**
DV1-U-000-14-C1+	DV1 CLEARCOAT GRAVITY GUN ONLY	A10	**580.00**
DV1-U-000-15-B+	DV1 GRAVITY GUN ONLY KIT	A10	**597.40**
DV1-U-BAR-10-C1+	DV1 CLEARCOAT DIGI GRAVITY GUN	A10	**655.00**
DV1-U-BAR-11-B	DV1 DIGI GRAVITY GUN ONLY KIT	A10	**674.65**
DV1-U-BAR-11-B+	DV1 DIGI GRAVITY GUN ONLY KIT	A10	**674.65**
DV1-U-BAR-11-C1+	DV1 CLEARCOAT DIGI GRAVITY GUN	A10	**655.00**
DV1-U-BAR-12-B	DV1 DIGI GRAVITY GUN ONLY KIT	A10	**674.65**
DV1-U-BAR-12-B+	DV1 DIGI GRAVITY GUN ONLY KIT	A10	**674.65**
DV1-U-BAR-12-C1+	DV1 CLEARCOAT DIGI GRAVITY GUN	A10	**655.00**
DV1-U-BAR-13-B	DV1 DIGI GRAVITY GUN ONLY KIT	A10	**674.65**
DV1-U-BAR-13-B+	DV1 DIGI GRAVITY GUN ONLY KIT	A10	**674.65**
DV1-U-BAR-13-C1+	DV1 CLEARCOAT DIGI GRAVITY GUN	A10	**655.00**
DV1-U-BAR-14-B+	DV1 DIGI GRAVITY GUN ONLY KIT	A10	**674.65**
DV1-U-BAR-14-C1+	DV1 CLEARCOAT DIGI GRAVITY GUN	A10	**655.00**
DV-8000035	ISOLATION VALVE 1/2"	J2	**72.62**
DV-9350811	UPPER COVER-DVFR-3 REGULATOR	J2	**70.35**
DV-9353301	FILTER BOWL FOR DVFR-3	J2	**97.85**
DV-9420601	DVFR BOWL WRENCH	J2	**29.97**
DV-9450806	DVFR UPPER COVER	J2	**115.36**
DV-9451705	DVFR FILTERING ELEMENT(5 Mic)	J2	**42.23**
DV-9451706	FILTER ELEMENT 20 MICRON	J2	**45.01**
DV-9451711	DVFR FINE FILTERING ELEMENT	J2	**192.61**
DV-9451711AC	ACTIVE CARBON FILTER ELEMENT	J2	**192.61**
DV-9453301-MET	DVFR FILTER BOWL & DRAIN	J2	**83.12**
DV-9453302	FILTERBOWL DVFR-1/-2/-8	J2	**161.71**
DVFR-P	SUPPORT/ PROTECTION DVFR2/8	J2	**140.08**
DVP-114	GASKET	D2	**10.20**
DVP-41	SUCTION HOSE ASSEMBLY	D2	**273.98**
DVX-86	SUCTION HOSE	D2	**51.71**
DX70R3-CF-FLG5	DX70 CART PUMP WITH FLG-P5-14	D1	**1,561.48**
DX70R3-TF	DX70 REGULATED TRIPOD MOUNT	D1	**1,071.20**
DX70R3-TF2	DX70 REGULATED TRIPOD MOUNT	D1	**1,168.02**
EGA-503-390F	TOUCH UP SPRAY GUN - 1/4"NPS	C1	**338.87**
FLCF-1	COALESCER 3/8"INLET.1/4"OUT	J1	**213.21**
FLFR-1	FILTER REG.3/8"INLET.1/4"OUT	J1	**254.41**
FLG-1-3	AIR CAP No.3 (FLG3)	B1	**48.18**
FLG-1-5-K	AIR CAP	B1	**36.36**
FLG-1-622-K	AIR CAP	B1	**36.36**
FLG-2-1.6K	NOZZLE KIT 1.6MM	B1	**29.77**
FLG-2-2.2K	NOZZLE KIT 2.2MM	B1	**29.77**
FLG-301	AIR CAP RETAINING RING(FLG3)	B1	**18.48**
FLG-302-18K	FLUID TIP & GASKET KIT(FLG3)	B1	**38.50**
FLG-304-K5	FLUID TIP GASKETS X 5 (FLG3)	B1	**13.64**
FLG-305	BAFFLE (FLG3)	B1	**34.32**
FLG-311	FLUID NEEDLE (FLG3)	B1	**17.71**
FLG-332-15K	FLUID TIP & GASKET KIT(FLG3)	B1	**38.50**
FLG-3-K2	AIRCAP RETAINING RING(2 PACK)	B1	**23.38**
FLG-401-1.6K	NEEDLE KIT 1.6MM	B1	**35.12**
FLG-403	SPREADER VALVE	B1	**23.90**
FLG-488	REPAIR KIT (FLG3)	B1	**26.37**
FLG-4-K5	NOZZLE SEAL (PACK OF 5)	B1	**11.43**
FLRC-1	FILTER REG./COALESCER	J1	**441.87**
FLRCAC-1	FILTER REG./COALESCER WITH	J1	**531.48**
GA-319	GAUGE (0-160 LB/SQ IN)	D2	**44.29**
GA-355	AIR PRESS GAUGE (KBII) 0-30PSI	D2	**19.47**
GA-382	AIR PRESSURE GAUGE (0-145 PSI)	D2	**32.55**
GFC-17-K5	GFC CUP WASHER (PACK OF 5)	D2	**0.82**
GFC-2-K5	DRIP CHECK LID - KIT OF 5	D2	**4.43**
GFC-402	LID C/W DRIP CHECK - 1 PINT	D2	**3.40**
GFC-404-K2	DISPOSABLE LID KIT	D2	**37.29**
GFC-501	GRAVITY CUP - 1 Pt ACETAL	B1	**43.78**
GFC-502	GRAVITY CUP (ALUMINIUM) 1 LITRE	B1	**72.00**
GFC-515	GRAVITY CUP - 1 Pt BLACK POLYESTER	B1	**57.37**
GFG-6	GUN HOOK	B1	**11.43**
GFGPRO-320-K	FLUID NEEDLE	B1	**36.77**
GFGPRO-C1-14	GRAVITY GUN & CUP,CONVENTIONAL	A4	**510.88**
GFGPRO-C1-16	GRAVITY GUN & CUP,CONVENTIONAL	A4	**510.88**
GFGPRO-C1-18	GRAVITY GUN & CUP,CONVENTIONAL	A4	**510.88**
GFGPRO-C2-14	GRAVITY GUN & CUP,CONVENTIONAL	A4	**510.88**
GFGPRO-C2-16	GRAVITY GUN & CUP,CONVENTIONAL	A4	**510.88**
GFGPRO-C2-18	GRAVITY GUN & CUP,CONVENTIONAL	A4	**510.88**
GFHV-4-DEX-K	FLUID NEEDLE - PACKED	B1	**50.47**
GFP-2-1.6-K	FLUID TIP (1.6mm)	B1	**62.32**
GFP-2-2.2-K	FLUID TIP (2.2mm)	B1	**62.32**
GFP-2-2.5-K	FLUID TIP (2.5mm)	B1	**62.32**
GFP-3-1-K5	FLUID TIP GASKET-AGL (5 PACK)	B1	**34.71**
GFV-50-F	GRAVITY GUN STAND (1 GUN)	B1	**55.93**
GGS-1	GRAVITY GUN STAND (3 GUNS)	B1	**102.69**
GL-1-K10	GUN LUBE.PACK OF 10x 2ML SACHETS	B1	**22.15**
GPI-GP1-16	GRAVITY GUN & CUP, TRANSTECH	A4	**298.70**
GPI-GP1-18	GRAVITY GUN & CUP, TRANSTECH	A4	**298.70**
GTI-108	TRIGGER	B1	**22.66**
GTI-213-085-K	BOXED FLUID TIP	B1	**142.80**
GTI-213-10-K	BOXED FLUID TIP	B1	**142.80**
GTI-213-11-K	BOXED FLUID TIP	B1	**142.80**
GTI-213-12-K	BOXED FLUID TIP	B1	**142.80**
GTI-213-13-K	BOXED FLUID TIP	B1	**142.80**
GTI-213-14-K	BOXED FLUID TIP	B1	**142.80**
GTI-213-15-K	FLUID TIP (1.5mm) Grav/Suct	B1	**142.80**
GTI-214-16-K	BOXED FLUID TIP(1.6mm) Hi-Flow	B1	**142.80**
GTI-214-18-K	BOXED FLUID TIP(1.8mm) Hi-Flow	B1	**142.80**
GTI-214-20-K	BOXED FLUID TIP (2.0mm)Hi-Flow	B1	**142.80**
GTI-214-22-K	BOXED FLUID TIP(2.2mm) Hi-Flow	B1	**142.80**
GTI-33-K5	BAFFLE SEALS (PACK OF 5)	B1	**27.60**
GTI-402-K	GUN BODY BUSHING KIT	B1	**70.32**
GTI-404-K	SPREADER VALVE - GRAVITY GUN	B1	**32.64**
GTI-405-K	SPREADER VALVE-SUCT/PRES GUN	B1	**32.64**
GTI-407-105	AIR CAP/RING	B1	**169.20**
GTI-407-110	AIR CAP/RING	B1	**144.00**
GTI-407-115	AIR CAP/RING	B1	**151.20**
GTI-407-123	AIR CAP/RING-PRESSURE	B1	**144.00**
GTI-408-K5	TRIGGER STUD & SCREW (5 PACK)	B1	**86.64**
GTI-409-K5	NEEDLE SPRING & PAD (5 PACK)	B1	**23.88**
GTI-413-K	BOXED FLUID NEEDLE	B1	**47.76**
GTI-414-K	NEEDLE ADJUSTING SCREW	B1	**30.12**
GTI-415-K	AIR FLOW VALVE	B1	**76.56**
GTI-416-10	SERVICE KIT - GRAVITY/SUCTION	B1	**230.40**
GTI-416-12	SERVICE KIT - GRAVITY/SUCTION	B1	**230.40**
GTI-416-13	SERVICE KIT - GRAVITY/SUCTION	B1	**230.40**
GTI-416-14	SERVICE KIT - GRAVITY/SUCTION	B1	**230.40**
GTI-416-15	SERVICE KIT - GRAVITY/SUCTION	B1	**230.40**
GTI-416-16	SERVICE KIT - GRAVITY/SUCTION	B1	**230.40**
GTI-416-18	SERVICE KIT - GRAVITY/SUCTION	B1	**230.40**
GTI-416-20	SERVICE KIT - GRAVITY/SUCTION	B1	**230.40**
GTI-416-22	SERVICE KIT - GRAVITY/SUCTION	B1	**230.40**
GTI-420-K	BOXED NEEDLE-GRAV/SUC.H/FLO	B1	**47.76**
GTI-425-K	BAFFLE & SEAL ASSY	B1	**54.00**
GTI-428-K5	SEAL & PIN KIT (5 PACK)	B1	**24.72**
GTI-445-K2	NEEDLE PACKING KIT OF 2	B1	**42.72**
GTI-449-10-K	BOXED GTI PRESSURE NEEDLE	B1	**47.76**
GTI-449-12-K	BOXED GTI PRESSURE NEEDLE	B1	**47.76**
GTI-449-14-K	BOXED GTI PRESSURE NEEDLE	B1	**47.76**
GTI-450-110-12	CAP.TIP & NEEDLE KIT	B1	**238.80**
GTI-450-110-13	CAP.TIP & NEEDLE KIT	B1	**238.80**
GTI-450-110-14	CAP.TIP & NEEDLE KIT	B1	**238.80**
GTI-450-110-15	CAP.TIP & NEEDLE KIT	B1	**238.80**
GTI-450-110-16	CAP.TIP & NEEDLE KIT	B1	**238.80**
GTI-450-110-18	CAP.TIP & NEEDLE KIT	B1	**238.80**
GTI-450-110-20	CAP.TIP & NEEDLE KIT	B1	**238.80**
GTI-450-110-22	CAP.TIP & NEEDLE KIT	B1	**238.80**
GTI-450-115-12	CAP,TIP & NEEDLE KIT	B1	**238.80**
GTI-450-115-13	CAP.TIP & NEEDLE KIT	B1	**238.80**
GTI-450-115-14	CAP.TIP & NEEDLE KIT	B1	**238.80**
GTI-450-115-15	CAP.TIP & NEEDLE KIT	B1	**238.80**
GTI-455-18	HIGH FLOW TIP/NEEDLE KIT	B1	**147.60**
GTI-455-22	HIGH FLOW TIP/NEEDLE KIT	B1	**147.60**
H-2008	ADAPTOR M/M ¼"NPTx¼"NPS/BSP	B2	**14.32**
H-6065	AIR HOSE.5/16"ID.10M.1/4" FITTING	B1	**74.06**
H-6085-QD	AIR HOSE.5/16"ID.10M.M&F QDs	B1	**139.05**
H-6085-QD-15	AIR HOSE 5/16"ID. 15M. M&F OD'S	B1	**182.31**
H-6086	10M AIR HOSE WITH FITTINGS	B1	**131.84**
H-7501	RUBBER AIR HOSE -5/16"ID	B1	**9.79**
H-7501-150M	RUBBER AIR HOSE 5/16" I/D 150M	B1	**1,263.81**
H-7501HA-1.2	AIR HOSE ASSY 5/16"ID, 1.2M	B1	**33.06**
H-7501HA-10	AIR HOSE ASSY 5/16"ID, 10M	B1	**110.21**
H-7501HA-15	AIR HOSE ASSY 5/16"ID, 15M	B1	**149.35**
H-7501HA-5	AIR HOSE ASSY 5/16"ID, 5M	B1	**67.26**
H-7501HA-7.5	AIR HOSE ASSY 5/16"ID, 7.5M	B1	**87.34**
H-7502	RUBBER AIR HOSE 3/8" I/D	B1	**9.79**
H-7502HA-10	AIR HOSE ASSY 3/8"ID, 10M	B1	**110.21**
H-7502HA-15	AIR HOSE ASSY 3/8""ID, 15M	B1	**149.35**
H-7502HA-7.5	AIR HOSE ASSY 3/8"ID, 7.5M	B1	**87.34**
H-7503	FLUID HOSE 1/4" I/D	B1	**9.99**
H-7503-150M	FLUID HOSE 1/4" I/D 150M REEL	B1	**1,285.44**
H-7503HA-1.45	FLUID HOSE ASSY 1/4" ID 1.45M	B1	**44.08**
H-7503HA-10	FLUID HOSE ASSY 1/4" ID 10M	B1	**126.69**
H-7503HA-15	FLUID HOSE ASSY 1/4" ID 15M	B1	**174.07**
H-7503HA-5	FLUID HOSE ASSY 1/4" ID 5M	B1	**77.25**
H-7503HA-7.5	FLUID HOSE ASSY 1/4" ID 7.5M	B1	**99.91**
H-7504	FLUID HOSE 3/8" I/D	B1	**9.99**
H-7504HA-10	FLUID HOSE ASSY 3/8" I/D 10M	B1	**129.78**
H-7504HA-15	FLUID HOSE ASSY 3/8" I/D 15M	B1	**178.19**
HAR-511	AIR REGULATOR 60 CFM	D2	**106.09**
HAV-501-B	BOXED VALVE WITH GAUGE	B1	**58.71**
JGA-156-K5	KIT OF 5 RETAINING CLIPS	B1	**20.39**
JGA-158	AIR INLET ADAPTOR 1/4"	B1	**12.98**

JGA-159-K	FLUID INLET & SEAL(UNIVERSAL)	B1	**12.77**
JGA-17	GUN BODY BUSHING	B1	**22.15**
JGA-421-DEX-K	BOXED NEEDLE KIT - H.G.STS	B1	**38.63**
JGA-421-FF-K	BOXED FLUID NEEDLE KIT-H.G.STS	B1	**38.63**
JGA-421-FW-K	FLUID NEEDLE KIT	B1	**38.63**
JGA-421-FX-K	FLUID NEEDLE KIT - H.G.STS	B1	**38.63**
JGA-51-K5	LOCKNUT - KIT OF 5	B1	**13.80**
JGAPPRO-C1-085	PRESSURE SPRAYGUN	A4	**493.37**
JGAPPRO-C1-10	PRESSURE SPRAYGUN	A4	**493.37**
JGAPPRO-C1-12	PRESSURE SPRAYGUN	A4	**493.37**
JGAPPRO-C1-14	PRESSURE SPRAYGUN	A4	**493.37**
JGAPPRO-C1-16	PRESSURE SPRAYGUN	A4	**493.37**
JGAPPRO-C1-18	PRESSURE SPRAYGUN	A4	**493.37**
JGAPPRO-C2-085	PRESSURE SPRAYGUN	A4	**493.37**
JGAPPRO-C2-10	PRESSURE SPRAYGUN	A4	**493.37**
JGAPPRO-C2-12	PRESSURE SPRAYGUN	A4	**493.37**
JGAPPRO-C2-14	PRESSURE SPRAYGUN	A4	**493.37**
JGAPPRO-C2-16	PRESSURE SPRAYGUN	A4	**493.37**
JGAPPRO-C2-18	PRESSURE SPRAYGUN	A4	**493.37**
JGAPPRO-C3-085	PRESSURE SPRAYGUN	A4	**493.37**
JGAPPRO-C3-10	PRESSURE SPRAYGUN	A4	**493.37**
JGAPPRO-C3-12	PRESSURE SPRAYGUN	A4	**493.37**
JGAPPRO-C3-14	PRESSURE SPRAYGUN	A4	**493.37**
JGAPPRO-C3-16	PRESSURE SPRAYGUN	A4	**493.37**
JGAPPRO-C3-18	PRESSURE SPRAYGUN	A4	**493.37**
JGAPRO-330-K	FLUID NEEDLE(JGAPRO P/S 16->)	B1	**36.77**
JGASPRO-C1-14	SUCTION SPRAYGUN AND CUP KIT	A4	**515.00**
JGASPRO-C1-16	SUCTION SPRAYGUN AND CUP KIT	A4	**515.00**
JGASPRO-C1-18	SUCTION SPRAYGUN AND CUP KIT	A4	**515.00**
JGASPRO-C2-14	SUCTION SPRAYGUN AND CUP KIT	A4	**515.00**
JGASPRO-C2-16	SUCTION SPRAYGUN AND CUP KIT	A4	**515.00**
JGASPRO-C2-18	SUCTION SPRAYGUN AND CUP KIT	A4	**515.00**
JGD-14-K5	SEALS - KIT OF FIVE	B1	**23.32**
JGD-402-K	BAFFLE HEAD & SEAL KIT	B1	**50.68**
JGHV-24	AIR CAP RETAINING RING	B1	**13.86**
JGHV-436-DE-K	BOXED FLUID NEEDLE KIT - STS	B1	**48.51**
JGHV-436-FF-K	BOXED FLUID NEEDLE KIT - STS	B1	**50.47**
JGHV-473-DE-K	BOXED TIP(2.0mm)-SOFT SEAT	B1	**220.80**
JGHV-473-FF-K	BOXED TIP(1.4mm)SOFT SEAT	B1	**159.60**
JGK-449-K	AIR VALVE KIT	B1	**92.48**
JGS-72-K5	GASKET - KIT OF FIVE	B1	**8.65**
JGV-261-K10	KIT OF 10 NEEDLE SPRINGS STS	B1	**30.12**
JGV-262-K5	AIR VLV.SPRING.STS-KIT OF 5	B1	**15.12**
K-5030	BAFFLE KIT FLG5	B1	**25.96**
K-5032	BAFFLE SERVICE KIT (PRESSURE)	B1	**18.33**
K-5040	SERVICE KIT FLG5	B1	**49.13**
KB-101-K5	SEAL - KIT OF 5	D2	**40.07**
KB-422	CUP KBII	D2	**136.99**
KB-428-1	REGULATOR ASSY (0-30 PSI)	D2	**36.98**
KB-432-K3	CHECK VALVE ASSY (PACK OF 3)	D2	**35.02**
KB-442	CUP ONLY (KBII) STAINLESS	D2	**153.47**
KB-444	CHECK VALVE ASSY	D2	**37.70**
KB-522	KBII 2LTR PRESSURE CUP(30PSI)	D1	**485.13**
KB-522-SS	2 Ltr PRESSURE CUP.STS(30PSI)	D1	**922.88**
KB-60-K6	GASKET (PACK OF 6)	D2	**5.15**
KB-622	KBII 2LTR PRESSURE CUP/HOSES	D1	**533.54**
KB-64	RETAINING RING	D2	**15.86**
KB-66	PRESSURE RELIEF VALVE	D2	**12.98**
KB-74	HANDLE	D2	**2.37**
KB-80-K5	GASKET (PACK OF 5)	D2	**38.83**
KB-81-K5	SLIP RING (PACK OF 5)	D2	**17.10**
KB-85-K5	GASKET (PACK OF 5)	D2	**5.15**
KGP-401	LID -1/2PINT WITH DRIP CHECK	D2	**25.65**
KGP-505	CUP ASSEMBLY(MPS) - 1/2 PINT	B1	**49.06**
KGP-509-1	GRAVITY CUP.1/2 PINT.W/BORNE	B1	**53.77**
KGP-5-K10	STRAINERS (PACK OF 10)	D2	**14.52**
KGP-5-K5	STRAINERS (PACK OF 5)	D2	**7.11**
KK-4502-EX-H	SERVICE KIT-JGA/JGV/GFG/GFV	B1	**166.80**
KK-4502-FF-H	SERVICE KIT-JGA/JGV/GFG/GFV	B1	**166.80**
KK-4502-FW-H	SERVICE KIT-JGA/JGV/GFG/GFV	B1	**166.80**
KK-4504-DH-880	CAP.TIP.NEEDLE - JGA/V.GFG/V	B1	**219.60**
KK-4504-EXH-186	CAP.TIP.NEEDLE - JGA/V.GFG/V	B1	**219.60**
KK-4504-EXH-30	CAP.TIP.NEEDLE - JGA/V.GFG/V	B1	**219.60**
KK-4504-EXH-80	CAP.TIP.NEEDLE - JGA/V.GFG/V	B1	**219.60**
KK-4504-FFH-186	CAP.TIP.NEEDLE - JGA/V.GFG/V	B1	**219.60**
KK-4504-FFH-30	CAP.TIP.NEEDLE - JGA/V.GFG/V	B1	**219.60**
KK-4504-FFH-765	CAP.TIP.NEEDLE - JGA/V.GFG/V	B1	**219.60**
KK-4504-FWH-186	CAP.TIP.NEEDLE - JGA/V.GFG/V	B1	**219.60**
KK-4558	GASKETS & SEALS. JGA/V/GFG/V	B1	**63.96**
KK-4584	GUN CLEANING KIT	B1	**67.26**
KK-4585	GUN MAINTENANCE KIT	B1	**112.27**
KK-4630	DIAPHRAGM & STUD KIT	D2	**386.25**
KK-4631	FLUID VALVE REPAIR KIT (STD)	D2	**221.45**
KK-4633	REVERSE SWITCH KIT	D2	**72.62**
KK-4634	PNEUMATIC DISTRIBUTOR KIT	D2	**186.43**
KK-4996	FLUID TUBE - STS KB11	D2	**147.29**
KK-4997	FLUID TUBE KIT (KBII)	D2	**62.52**
KK-5051	KB CUP LINER (PACK OF 20)	D2	**60.87**
KK-5058-2	GTI GUN REPAIR KIT	B1	**26.78**
KR-110-K3	SPOT POTS - KIT OF THREE	D2	**31.00**
KR-115-K5	DIAPHRAGMS - KIT OF FIVE	D2	**8.14**
KR-11-K3	CUP GASKETS - KIT OF 3	D2	**6.49**
KR-4001-B	CUP LID ASSEMBLY.SUCTION.	D2	**74.06**
KR-459-K5	DEVILBISS MINI-CUP.KIT OF 5	D2	**42.95**
KR-466-K	CUP ONLY. 1L. SUCTION FEED	D2	**58.30**
KR-483-K10	PAINT STRAINERS - 130 MESH	D2	**39.86**
KR-484-K10	PAINT STRAINERS - 51 MESH	D2	**39.86**
KR-566-1-B	CUP. 1L. SUCTION. DRIP FREE	B1	**109.18**
KR-69-K3	CUP GASKETS.LEATHER.KIT OF 3	D2	**14.94**
MB-4039-80	AIR CAP/RETAINING RING	B1	**129.78**
MBD-11-K5	NUT (PACK OF 5) (KB-II)	D2	**11.95**
MC-1-K1000	PAINT MIXING CUPS (1000 BOX)	B1	**324.45**
MC-1-K50	PAINT MIX CUPS (PACK OF 50)	B1	**25.65**
MC-2-K1000	PAINT MIX CUP LIDS(1000 BOX)	B1	**189.52**
MC-2-K50	PAINT CUP LIDS (PACK OF 50)	B1	**17.61**
MPS-18	CARTRIDGE PACKING	B1	**10.40**
MPV-10	QD STEM (1/4 MALE THREAD)	B1	**12.77**
MPV-17-K10	COTTON RIMLET.HALF MASK X10	J2	**41.20**
MPV-1-K10	SPARE VIZOR COVER (PACK OF 10)	J2	**29.56**
MPV-20	QUICK DETACHABLE MALE STEM	J2	**10.61**
MPV-22	CARBON CARTRIDGE	J2	**129.78**
MPV-24-K5	NECK COVER-GREY (PACK OF 5)	J2	**218.36**
MPV-2-K5	DISPOSABLE HOODS (PACK OF 5)	J2	**76.32**
MPV-35-K10	DETECTORS - CARBON MONOXIDE	J2	**218.36**
MPV-36-K10	DETECTORS - CARBON DIOXIDE	J2	**218.36**
MPV-37-K10	DETECTORS - OIL MIST	J2	**218.36**
MPV-38-K10	DETECTORS - WATER VAPOUR	J2	**218.36**
MPV-40	DETECTOR TUBE HOLDER - BLACK	J2	**284.28**
MPV-4006	SAFETY GOGGLES	J2	**35.74**
MPV-42	AIR FLOW INDICATOR	J2	**115.36**
MPV-424	QD CONNECTOR(1/4 MALE THREAD)	B1	**51.29**
MPV-43-K5	BREATHESAFE RECORD CARD (X5)	J2	**8.03**
MPV-442	QD FEMALE VALVE	J2	**34.20**
MPV-44-K10	INTEGRAL VISOR COVER (X10)	J2	**29.56**
MPV-44-K50	INTEGRAL VISOR COVER (X50)	J2	**91.67**
MPV-453	RED BROWGUARD/HEADBAND	J2	**40.38**
MPV-454	VIZOR + FOAM SEAL	J2	**90.85**
MPV-455	WAISTBELT REG. HOUSING	J2	**156.56**
MPV-456	RUBBER HOSE 4' 5/16"ID. QD	J2	**81.89**
MPV-457	AIR TUBE WITH DIFFUSER	J2	**78.90**
MPV-458	BAG FOR VISOR - TYVEK	J2	**15.55**
MPV-462	QD CONNECTOR(1/4BSP FEM THRD)	B1	**29.97**
MPV-463	QD CONNECTION KIT	B1	**106.09**
MPV-476-K5	FOAM FACE CARTRIDGE (X5)	J2	**155.53**
MPV-477-K5	TYVEK FACE CARTRIDGE (X5)	J2	**160.68**
MPV-478-K5	INTEGRAL CLEAR VISOR ONLY	J2	**209.09**
MPV-486	FACEPIECE (BLUE HALF MASK)	J2	**32.03**
MPV-487	HEADSTRAP/MOULDED CAGE ASSY	J2	**22.15**
MPV-488	BREATHING HOSE+MALE Q/D	J2	**76.32**
MPV-489-K2	EXHALATION VALVE(PACK OF 2)	J2	**40.79**
MPV-492	PRE-FILTER COVERS+10 FILTERS	J2	**66.95**
MPV-492	PRE-FILTER COVERS+10 FILTERS	J2	**64.07**
MPV-494-A1B1-K2	KIT OF TWO A1B1 FILTERS	J2	**54.08**
MPV-494-COUV	LID FILTER VALUAIR P1ŠP2+PREF	J2	**12.88**
MPV-494-K2	PAIR OF A2 SPEC. CARTRIDGES	J2	**37.60**
MPV-496	FREEDOM A2-DISP.CART.H/MASK	J1	**63.65**
MPV-5	QD STEM (1/4 FEM THREAD)	B1	**11.12**
MPV-506-2	HALF MASK & AIR SUPPLY TUBE	J1	**161.71**
MPV-517	VIZOR COMPLETE	J1	**200.85**
MPV-518	WAISTBELT WITH Q.D. CONNS.	J1	**420.24**
MPV-519	WAISTBELT & FILTER HOUSING	J2	**69.53**
MPV-525 RECAL	BREATHESAFE KIT RECALIBRATION	J2	**260.59**
MPV-59-K10	GOGGLE COVERS (PACK OF 10)	J2	**18.03**
MPV-60-K3	SWIVEL QD STEM (PACK OF 3)	B1	**92.29**
MPV-60-SINGLE	SWIVEL QD STEM	B1	**31.00**
MPV-629	VALUAIR CARTRIDGE H/MASK KIT	J1	**87.86**
P-HC-4527	HOSE CONN 1/4" NPSM (F) - 5/16" BORE HOSE	B1	**11.54**
P-HC-4528	HOSE CONN 1/4" NPSM (F) - 3/8" BORE HOSE	B1	**11.54**
P-HC-4543	HOSE CONN 3/8" NPSM (F) - 1/4" BORE HOSE	B1	**15.86**
P-HC-4548	HOSE CONN 3/8" NPSM (F) - 3/8" BORE HOSE	B1	**15.86**
PRI-2-16-K	BOXED FLUID TIP (1.6mm) PRIMER	B1	**105.36**
PRI-2-18-K	BOXED FLUID TIP (1.8mm) PRIMER	B1	**105.36**
PRI-2-20-K	BOXED FLUID TIP (2.0mm) PRIMER	B1	**105.36**
PRI-2-22-K	BOXED FLUID TIP (2.2mm) PRIMER	B1	**105.36**
PRI-2-25-K	BOXED FLUID TIP (2.5mm) PRIMER	B1	**105.36**
PRI-3-K	BOXED FLUID NEEDLE - PRIMER	B1	**45.24**
PRI-407-310	AIR CAP/RING-COMPLIANT T/TECH	B1	**144.00**
PRI-416-16	SERVICE KIT - PRIMER	B1	**216.00**
PRI-416-18	SERVICE KIT - PRIMER	B1	**216.00**
PRI-416-20	SERVICE KIT - PRIMER	B1	**216.00**
PRI-416-22	SERVICE KIT - PRIMER	B1	**216.00**
PRI-416-25	SERVICE KIT - PRIMER	B1	**216.00**
PRI-450-310-16	CAP.TIP & NEEDLE KIT, PRI	B1	**190.80**
PRI-450-310-18	CAP.TIP & NEEDLE KIT, PRI	B1	**190.80**
PRILT-450-PR10-14	CAP, TIP & NEEDLE KIT	B1	**224.54**
PRILT-450-PR10-16	CAP, TIP & NEEDLE KIT	B1	**224.54**
PRILT-450-PR10-18	CAP, TIP & NEEDLE KIT	B1	**224.54**
PRILT-450-PR10-20	CAP, TIP & NEEDLE KIT	B1	**224.54**
PRILT-450-PR10-25	CAP, TIP & NEEDLE KIT	B1	**224.54**
PRILT-GPR10-14	GRAVITY GUN & CUP - PRIMER	A4	**409.94**
PRILT-GPR10-16	GRAVITY GUN & CUP - PRIMER	A4	**409.94**
PRILT-GPR10-18	GRAVITY GUN & CUP - PRIMER	A4	**409.94**
PRILT-GPR10-20	GRAVITY GUN & CUP - PRIMER	A4	**409.94**
PRILT-GPR10-25	GRAVITY GUN & CUP - PRIMER	A4	**409.94**
PRILT-GPR10-UV1	UV GRAVITY GUN & CUP	A4	**409.94**
PRILT-GPR10-UV2	UV GRAVITY GUN & CUP	A4	**409.94**

PRIPRO-100-P1-K	TRANSTECH AIRCAP - PRIMER	B1	**123.60**
PRIPRO-102-PR10-K	HIGH EFFICIENCY AIRCAP	B1	**123.60**
PRIPRO-210-14-K	FLUID NOZZLE (1.4mm)	B1	**106.09**
PRIPRO-210-16-K	FLUID NOZZLE (1.6mm)	B1	**106.09**
PRIPRO-210-18-K	FLUID NOZZLE (1.8mm)	B1	**106.09**
PRIPRO-210-20-K	FLUID NOZZLE (2.0mm)	B1	**106.09**
PRIPRO-210-25-K	FLUID NOZZLE (2.5mm)	B1	**106.09**
PRIPRO-219-UV1-K	FLUID TIP UV GUN SIZE 1	B1	**106.09**
PRIPRO-219-UV2-K	FLUID TIP UV GUN SIZE 2	B1	**106.09**
PRIPRO-220-14-K	FLUID TIP 1.4mm	B1	**106.09**
PRIPRO-220-16-K	FLUID TIP 1.6mm	B1	**106.09**
PRIPRO-220-18-K	FLUID TIP 1.8mm	B1	**106.09**
PRIPRO-220-20-K	FLUID TIP 2.0mm	B1	**106.09**
PRIPRO-220-25-K	FLUID TIP 2.5mm	B1	**106.09**
PRIPRO-310-K	FLUID NEEDLE	B1	**36.77**
PRIPRO-319-K	FLUID NEEDLE UV 1&2	B1	**36.77**
PRIPRO-320-K	FLUID NEEDLE	B1	**36.77**
PRIPRO-450-P1-14	CAP, TIP & NEEDLE KIT	B1	**224.54**
PRIPRO-450-P1-16	CAP, TIP & NEEDLE KIT	B1	**224.54**
PRIPRO-450-P1-18	CAP, TIP & NEEDLE KIT	B1	**224.54**
PRIPRO-450-P1-20	CAP, TIP & NEEDLE KIT	B1	**224.54**
PRIPRO-450-P1-25	CAP, TIP & NEEDLE KIT	B1	**224.54**
PRO-100-H1-K	BOXED HVLP AIR CAP	B1	**123.60**
PRO-100-HV30-K	AIR CAP & RETAINING RING	B1	**123.60**
PRO-100-T110-K	BOXED TRANSTECH AIR CAP	B1	**123.60**
PRO-100-T1-K	BOXED TRANSTECH AIR CAP	B1	**123.60**
PRO-100-T2-K	BOXED TRANSTECH AIR CAP	B1	**123.60**
PRO-100-T3-K	BOXED TRANSTECH AIRCAP T3	B1	**123.60**
PRO-100-T4-K	BOXED TRANSTECH AIRCAP T4	B1	**123.60**
PRO-100-TE10-K	AIR CAP & RETAINING RING	B1	**123.60**
PRO-100-TE20-K	AIR CAP & RETAINING RING	B1	**123.60**
PRO-100-TE30-K	AIR CAP & RETAINING RING	B1	**123.60**
PRO-100-TE40-K	AIR CAP & RETAINING RING	B1	**123.60**
PRO-100-TE50-K	AIR CAP & RETAINING RING	B1	**123.60**
PRO-102-GP1-K	GP1 AIRCAP & RET. RING TT	B1	**123.60**
PRO-102-HV25-K	BOXED HVLP AIR CAP	B1	**123.60**
PRO-102-HV30-K	BOXED HVLP AIR CAP	B1	**123.60**
PRO-102-R40-K	AIR CAP ASSY R40	B1	**123.60**
PRO-102-T110-K	HIGH EFFICIENCY AIR CAP ASSY	B1	**123.60**
PRO-102-TE10-K	BOXED HIGH EFFICIENCY AIR CAP	B1	**123.60**
PRO-102-TE20-K	BOXED HIGH EFFICIENCY AIR CAP	B1	**123.60**
PRO-102-TE30-K	BOXED AIR CAP TE30 ASSY	B1	**123.60**
PRO-102-TE40-K	BOXED AIR CAP TE40 ASSY	B1	**123.60**
PRO-102-TE50-K	AIR CAP & RETAINING RING TE50	B1	**123.60**
PRO-12-K	FLUID INLET CONNECTOR KIT	B1	**18.03**
PRO-15-K3	CLIP MOULDING - KIT OF 3	B1	**10.61**
PRO-200-11-K	FLUID TIP (GRAVITY)	B1	**106.09**
PRO-200-12-K	FLUID TIP (GRAVITY)	B1	**106.09**
PRO-200-13-K	FLUID TIP (GRAVITY)	B1	**106.09**
PRO-200-14-K	FLUID TIP (GRAVITY)	B1	**106.09**
PRO-200-16-K	FLUID TIP (GTIS/P PRO)	B1	**106.09**
PRO-200-18-K	FLUID TIP (GTIPPRO,GTISPRO)	B1	**106.09**
PRO-200-20-K	FLUID TIP (GTISPRO)	B1	**106.09**
PRO-205-05-K	FLUID NOZZLE (GTIPPRO+AGMDPRO)	B1	**106.09**
PRO-205-07-K	FLUID NOZZLE (GTIPPRO)	B1	**106.09**
PRO-205-085-K	FLUID NOZZLE (GTIPPRO)	B1	**106.09**
PRO-205-10-K	FLUID NOZZLE (GTIPPRO)	B1	**106.09**
PRO-205-12-K	FLUID NOZZLE (GTIPPRO)	B1	**106.09**
PRO-205-14-K	FLUID NOZZLE (GTIPPRO)	B1	**106.09**
PRO-205-16-K	FLUID NOZZLE (GTIPPRO)	B1	**106.09**
PRO-205-18-K	FLUID NOZZLE (GTIPPRO)	B1	**106.09**
PRO-300-K	FLUID NEEDLE (GTIPRO GRAVITY)	B1	**36.77**
PRO-301-K	FLUID NEEDLE (PRO LITE)	B1	**36.77**
PRO-305-085-10-K	FLUID NEEDLE 085/10 (PRESSURE)	B1	**36.77**
PRO-305-12-14-K	FLUID NEEDLE 12/14 (PRESSURE)	B1	**36.77**
PRO-306-12-14-K	FLUID NEEDLE	B1	**36.77**
PRO-306-16-18-K	FLUID NEEDLE	B1	**36.77**
PRO-315-K	FLUID NEEDLE(GTIPRO P/S, 16->)	B1	**36.77**
PRO-320-05-07-K	PRO-LITE PRESSURE FLUID NEEDLE	B1	**36.77**
PRO-320-085-10-K	BOXED FLUID NEEDLE- PROL PRESS	B1	**36.77**
PRO-320-12-14-K	BOXED FLUID NEEDLE- PROL PRESS	B1	**36.77**
PRO-325-K	BOXED FLUID NEEDLE	B1	**36.77**
PRO-3-K	FLUID ADJ. KNOB, SPRING & PAD	B1	**31.00**
PRO-402-K	SPREADER VALVE ASSY (PRO GRAV)	B1	**39.76**
PRO-404-K	SPREADER VALVE ASSY (PRO S/P)	B1	**27.60**
PRO-405-K	RETAINING RING ASSEMBLY	B1	**51.29**
PRO-406-K	SPREADER VALVE ASSY (PRO-LITE)	B1	**39.76**
PRO-407-BL-K	CHEATER VALVE ASSEMBLY	B1	**57.37**
PRO-407-K	CHEATER VALVE ASSEMBLY	B1	**57.37**
PRO-408-BL-K	BLACK SPREADER VALVE ASSEMBLY	B1	**39.76**
PRO-408-K	SPREADER VALVE ASSEMBLY	B1	**39.76**
PRO-411-K	CHEATER VALVE ASSEMBLY	B1	**57.37**
PRO-415-1	PRO SPRAY GUN REPAIR KIT	B1	**33.99**
PRO-420-K	RETAINING RING ASSEMBLY	B1	**44.50**
PRO-450-H1-12	CAP.TIP & NEEDLE KIT, GTIPRO	B1	**224.54**
PRO-450-H1-13	CAP.TIP & NEEDLE KIT, GTIPRO	B1	**224.54**
PRO-450-H1-14	CAP.TIP & NEEDLE KIT, GTIPRO	B1	**224.54**
PRO-450-T110-12	CAP.TIP & NEEDLE KIT, GTIPRO	B1	**224.54**
PRO-450-T110-13	CAP.TIP & NEEDLE KIT, GTIPRO	B1	**224.54**
PRO-450-T110-14	CAP.TIP & NEEDLE KIT, GTIPRO	B1	**224.54**
PRO-450-T1-12	CAP.TIP & NEEDLE KIT, GTIPRO	B1	**224.54**
PRO-450-T1-13	CAP.TIP & NEEDLE KIT, GTIPRO	B1	**224.54**
PRO-450-T1-14	CAP.TIP & NEEDLE KIT, GTIPRO	B1	**224.54**
PRO-450-T2-12	CAP.TIP & NEEDLE KIT, GTIPRO	B1	**224.54**
PRO-450-T2-13	CAP.TIP & NEEDLE KIT, GTIPRO	B1	**224.54**
PRO-450-T2-14	CAP.TIP & NEEDLE KIT, GTIPRO	B1	**224.54**
PRO-451-H1-085	CAP.TIP, NEEDLE KIT,GTIPRO S/P	B1	**224.54**
PRO-451-H1-10	CAP.TIP, NEEDLE KIT,GTIPRO S/P	B1	**224.54**
PRO-451-H1-16	CAP.TIP, NEEDLE KIT,GTIPRO S/P	B1	**224.54**
PRO-451-H1-18	CAP.TIP, NEEDLE KIT,GTIPRO S/P	B1	**224.54**
PRO-451-H1-20	CAP.TIP, NEEDLE KIT,GTIPRO S/P	B1	**224.54**
PRO-451-T1-10	CAP.TIP, NEEDLE KIT,GTIPRO S/P	B1	**224.54**
PRO-451-T110-14	CAP.TIP, NEEDLE KIT,GTIPRO S/P	B1	**224.54**
PRO-451-T110-16	CAP.TIP, NEEDLE KIT,GTIPRO S/P	B1	**224.54**
PRO-451-T110-18	CAP.TIP, NEEDLE KIT,GTIPRO S/P	B1	**224.54**
PRO-451-T110-20	CAP.TIP, NEEDLE KIT,GTIPRO S/P	B1	**224.54**
PRO-451-T1-12	CAP.TIP, NEEDLE KIT,GTIPRO S/P	B1	**224.54**
PRO-451-T1-14	CAP.TIP, NEEDLE KIT,GTIPRO S/P	B1	**224.54**
PRO-451-T1-16	CAP.TIP, NEEDLE KIT,GTIPRO S/P	B1	**224.54**
PRO-451-T1-18	CAP.TIP, NEEDLE KIT,GTIPRO S/P	B1	**224.54**
PRO-451-T1-20	CAP.TIP, NEEDLE KIT,GTIPRO S/P	B1	**224.54**
PRO-451-T2-085	CAP.TIP, NEEDLE KIT,GTIPRO S/P	B1	**224.54**
PRO-451-T2-10	CAP.TIP, NEEDLE KIT,GTIPRO S/P	B1	**224.54**
PRO-451-T2-12	CAP.TIP, NEEDLE KIT,GTIPRO S/P	B1	**224.54**
PRO-451-T2-14	CAP.TIP, NEEDLE KIT,GTIPRO S/P	B1	**224.54**
PRO-451-T2-16	CAP.TIP, NEEDLE KIT,GTIPRO S/P	B1	**224.54**
PRO-451-T2-18	CAP.TIP, NEEDLE KIT,GTIPRO S/P	B1	**224.54**
PRO-451-T2-20	CAP.TIP, NEEDLE KIT,GTIPRO S/P	B1	**224.54**
PRO-451-T3-13	CAP.TIP, NEEDLE KIT,GTIPRO S/P	B1	**224.54**
PRO-451-T4-085	CAP.TIP, NEEDLE KIT,GTIPRO S/P	B1	**224.54**
PRO-451-T4-10	CAP.TIP, NEEDLE KIT,GTIPRO S/P	B1	**224.54**
PRO-451-T4-12	CAP.TIP, NEEDLE KIT,GTIPRO S/P	B1	**224.54**
PRO-451-T4-14	CAP.TIP, NEEDLE KIT,GTIPRO S/P	B1	**224.54**
PRO-451-T4-20	CAP.TIP, NEEDLE KIT,GTIPRO S/P	B1	**224.54**
PRO-452-T110-12	CAP.TIP & NEEDLE KIT, GTIPRO	B1	**224.54**
PRO-452-T110-13	CAP.TIP & NEEDLE KIT, GTIPRO	B1	**224.54**
PRO-452-T110-14	CAP.TIP & NEEDLE KIT, GTIPRO	B1	**224.54**
PRO-453-T110-085	CAP.TIP, NEEDLE KIT,GTIPRO S/P	B1	**224.54**
PRO-453-T110-16	CAP.TIP, NEEDLE KIT,GTIPRO S/P	B1	**224.54**
PRO-453-T110-18	CAP.TIP, NEEDLE KIT,GTIPRO S/P	B1	**224.54**
PRO-453-T110-20	CAP.TIP, NEEDLE KIT,GTIPRO S/P	B1	**224.54**
PRO-470	SPRAY GUN REPAIR KIT	B1	**33.99**
PRO-471	AIR VALVE KIT	B1	**73.75**
PRO-472-K3	NEEDLE SPRING KIT	B1	**12.98**
PRO-5-K	FLUID ADJ. KNOB, SPRING & PAD	B1	**31.00**
PROAIR-1	FILTER REGULATOR	J1	**290.46**
PROAIR-2	FILTER REGULATOR/COALESCER	J1	**925.97**
PROAIR-3	FILTER REGULATOR/COALESCER/ACT CARBON	J1	**1,027.94**
PROAIR-51	PROAIR FILTER ELEMENT(5mic)	J2	**44.81**
PROAIR-52	PROAIR FINE FILTER ELEMENT	J2	**180.25**
PROAIR-53	ACTIVE CARBON FILTER ELEMENT	J2	**180.25**
PROAIR-62	KIT OF PROAIR-51 & 52	J2	**213.21**
PROAIR-63	KIT OF PROAIR-51, 52 & 53	J2	**358.44**
PROAIR-71	PROAIR UPPER COVER ASSY	J2	**67.26**
PROAIR-72	PROAIR FILTER BOWL & DRAIN	J2	**67.26**
PROC-120-C1-K	CONVENTIONAL AIR CAP C1	B1	**123.60**
PROC-120-C2-K	CONVENTIONAL AIR CAP C2	B1	**123.60**
PROC-120-C3-K	CONVENTIONAL AIR CAP C3	B1	**123.60**
PROC-215-14-K	FLUID NOZZLE	B1	**106.09**
PROC-215-16-K	FLUID NOZZLE	B1	**106.09**
PROC-215-18-K	FLUID NOZZLE 1.8	B1	**106.09**
PROC-220-14-K	FLUID NOZZLE 14	B1	**106.09**
PROC-220-16-K	FLUID NOZZLE 16	B1	**106.09**
PROC-220-18-K	FLUID NOZZLE 18	B1	**106.09**
PROC-230-085-K	FLUID NOZZLE JGAPPRO (PRES)	B1	**106.09**
PROC-230-10-K	FLUID NOZZLE JGAPPRO (PRES)	B1	**106.09**
PROC-230-12-K	FLUID NOZZLE JGAPPRO (PRES)	B1	**106.09**
PROC-230-14-K	FLUID NOZZLE JGAPPRO (PRES)	B1	**106.09**
PROGTI-455-HV25-13	CAP.TIP & NEEDLE KIT, PROGTI	B1	**224.54**
PROGTI-455-HV30-13	CAP.TIP & NEEDLE KIT, PROGTI	B1	**224.54**
PROGTI-455-HV30-14	CAP.TIP & NEEDLE KIT, PROGTI	B1	**224.54**
PROGTI-455-T110-12	CAP.TIP & NEEDLE KIT, PROGTI	B1	**224.54**
PROGTI-455-T110-13	CAP.TIP & NEEDLE KIT, PROGTI	B1	**224.54**
PROGTI-455-TE10-12	CAP.TIP & NEEDLE KIT, PROGTI	B1	**224.54**
PROGTI-455-TE10-13	CAP.TIP & NEEDLE KIT, PROGTI	B1	**224.54**
PROGTI-455-TE20-12	CAP.TIP & NEEDLE KIT, PROGTI	B1	**224.54**
PROGTI-455-TE20-13	CAP.TIP & NEEDLE KIT, PROGTI	B1	**224.54**
PROGTI-455-TE20-14	CAP.TIP & NEEDLE KIT, PROGTI	B1	**224.54**
PROGTI-GHV25-1112BU	GTIPRO GRAVITY GUN & CUP, BLUE,	A3	**565.47**
PROGTI-GHV25-1213BK	GTIPRO GRAVITY GUN & CUP, BLACK,	A3	**565.47**
PROGTI-GHV25-1213BU	GTIPRO GRAVITY GUN & CUP, BLUE,	A3	**565.47**
PROGTI-GHV25-1314BU	GTIPRO GRAVITY GUN & CUP, BLUE,	A3	**565.47**
PROGTI-GHV30-1213BK	GTIPRO GRAVITY GUN & CUP, BLACK,	A3	**565.47**
PROGTI-GHV30-1213BU	GTIPRO GRAVITY GUN & CUP, BLUE,	A3	**565.47**
PROGTI-GHV30-1213GD	GTIPRO GRAVITY GUN & CUP, GOLD,	A3	**565.47**
PROGTI-GHV30-1314BK	GTIPRO GRAVITY GUN & CUP, BLACK,	A3	**565.47**
PROGTI-GHV30-1314BU	GTIPRO GRAVITY GUN & CUP, BLUE,	A3	**565.47**
PROGTI-GHV30-1314GD	GTIPRO GRAVITY GUN & CUP, GOLD,	A3	**565.47**
PROGTI-GT110-1213BK	GTIPRO GRAVITY GUN & CUP, BLACK,	A3	**565.47**
PROGTI-GT110-1213BU	GTIPRO GRAVITY GUN & CUP, BLUE,	A3	**565.47**
PROGTI-GT110-1213GD	GTIPRO GRAVITY GUN & CUP, GOLD,	A3	**565.47**
PROGTI-GT110-1314BK	GTIPRO GRAVITY GUN & CUP, BLACK,	A3	**565.47**
PROGTI-GT110-1314BU	GTIPRO GRAVITY GUN & CUP, BLUE,	A3	**565.47**
PROGTI-GT110-1314GD	GTIPRO GRAVITY GUN & CUP, GOLD,	A3	**565.47**
PROGTI-GTE10-1213BK	GTIPRO GRAVITY GUN & CUP, BLACK,	A3	**565.47**
PROGTI-GTE10-1213BU	GTIPRO GRAVITY GUN & CUP, BLUE,	A3	**565.47**

PROGTI-GTE10-1213GD	GTIPRO GRAVITY GUN & CUP, GOLD,	A3	**565.47**
PROGTI-GTE10-1314BK	GTIPRO GRAVITY GUN & CUP, BLACK,	A3	**565.47**
PROGTI-GTE10-1314BU	GTIPRO GRAVITY GUN & CUP, BLUE,	A3	**565.47**
PROGTI-GTE10-1314GD	GTIPRO GRAVITY GUN & CUP, GOLD,	A3	**565.47**
PROGTI-GTE20-1213BK	GTIPRO GRAVITY GUN & CUP, BLACK,	A3	**565.47**
PROGTI-GTE20-1213BU	GTIPRO GRAVITY GUN & CUP, BLUE,	A3	**565.47**
PROGTI-GTE20-1213GD	GTIPRO GRAVITY GUN & CUP, GOLD,	A3	**565.47**
PROGTI-GTE20-1314BK	GTIPRO GRAVITY GUN & CUP, BLACK,	A3	**565.47**
PROGTI-GTE20-1314BU	GTIPRO GRAVITY GUN & CUP, BLUE,	A3	**565.47**
PROGTI-GTE20-1314GD	GTIPRO GRAVITY GUN & CUP, GOLD,	A3	**565.47**
PROGTI-PHV30-12BK	PRESSURE FEED PRO SPRAYGUN	A2	**580.92**
PROGTI-PHV30-14BK	PRESSURE FEED PRO SPRAYGUN	A2	**580.92**
PROGTI-PT110-085BK	PRESSURE FEED PRO SPRAYGUN	A2	**580.92**
PROGTI-PT110-10BK	PRESSURE FEED PRO SPRAYGUN*	A2	**580.92**
PROGTI-PT110-12BK	PRESSURE FEED PRO SPRAYGUN	A2	**580.92**
PROGTI-PT110-14BK	PRESSURE FEED PRO SPRAYGUN	A2	**580.92**
PROGTI-PT110-16BK	PRESSURE FEED PRO SPRAYGUN	A2	**580.92**
PROGTI-PT110-18BK	PRESSURE FEED PRO SPRAYGUN	A2	**580.92**
PROGTI-PTE10-085BK	PRESSURE FEED PRO SPRAYGUN	A2	**580.92**
PROGTI-PTE10-10BK	PRESSURE FEED PRO SPRAYGUN	A2	**580.92**
PROGTI-PTE10-12BK	PRESSURE FEED PRO SPRAYGUN	A2	**580.92**
PROGTI-PTE10-14BK	PRESSURE FEED PRO SPRAYGUN	A2	**580.92**
PROGTI-PTE10-16BK	PRESSURE FEED PRO SPRAYGUN	A2	**580.92**
PROGTI-PTE10-18BK	PRESSURE FEED PRO SPRAYGUN	A2	**580.92**
PROGTI-PTE20-085BK	PRESSURE FEED PRO SPRAYGUN	A2	**580.92**
PROGTI-PTE20-10BK	PRESSURE FEED PRO SPRAYGUN	A2	**580.92**
PROGTI-PTE20-12BK	PRESSURE FEED PRO SPRAYGUN	A2	**580.92**
PROGTI-PTE20-14BK	PRESSURE FEED PRO SPRAYGUN	A2	**580.92**
PROGTI-PTE20-16BK	PRESSURE FEED PRO SPRAYGUN	A2	**580.92**
PROGTI-PTE20-18BK	PRESSURE FEED PRO SPRAYGUN	A2	**580.92**
PROGTI-PTE30-12BK	PRESSURE FEED PRO SPRAYGUN	A2	**580.92**
PROGTI-PTE30-14BK	PRESSURE FEED PRO SPRAYGUN	A2	**580.92**
PROGTI-PTE30-18BK	PRESSURE FEED PRO SPRAYGUN	A2	**580.92**
PROGTI-PTE40-085BK	PRESSURE FEED PRO SPRAYGUN	A2	**580.92**
PROGTI-PTE40-10BK	PRESSURE FEED PRO SPRAYGUN	A2	**580.92**
PROGTI-PTE40-12BK	PRESSURE FEED PRO SPRAYGUN	A2	**580.92**
PROGTI-PTE40-14BK	PRESSURE FEED PRO SPRAYGUN	A2	**580.92**
PROGTI-PTE40-16BK	PRESSURE FEED PRO SPRAYGUN	A2	**580.92**
PROGTI-PTE40-18BK	PRESSURE FEED PRO SPRAYGUN	A2	**580.92**
PROGTI-SHV30-16BK	SUCTION FEED PRO SPRAYGUN KIT	A2	**695.25**
PROGTI-SHV30-18BK	SUCTION FEED PRO SPRAYGUN KIT	A2	**695.25**
PROGTI-SHV30-20BK	SUCTION FEED PRO SPRAYGUN KIT	A2	**695.25**
PROGTI-ST110-16BK	SUCTION FEED PRO SPRAYGUN KIT*	A2	**695.25**
PROGTI-ST110-18BK	SUCTION FEED PRO SPRAYGUN KIT*	A2	**695.25**
PROGTI-ST110-20BK	SUCTION FEED PRO SPRAYGUN KIT	A2	**695.25**
PROGTI-STE10-16BK	SUCTION FEED PRO SPRAYGUN KIT	A2	**695.25**
PROGTI-STE10-18BK	SUCTION FEED PRO SPRAYGUN KIT	A2	**695.25**
PROGTI-STE10-20BK	SUCTION FEED PRO SPRAYGUN KIT	A2	**695.25**
PROGTI-STE20-16BK	SUCTION FEED PRO SPRAYGUN KIT	A2	**695.25**
PROGTI-STE20-18BK	SUCTION FEED PRO SPRAYGUN KIT	A2	**695.25**
PROGTI-STE20-20BK	SUCTION FEED PRO SPRAYGUN KIT	A2	**695.25**
PROL-455-HV25-11	CAP,TIP & NEEDLE KIT, PROLITE GRAVITY	B1	**224.54**
PROL-455-HV25-12	CAP,TIP & NEEDLE KIT, PROLITE GRAVITY	B1	**224.54**
PROL-455-HV25-13	CAP,TIP & NEEDLE KIT, PROLITE GRAVITY	B1	**224.54**
PROL-455-HV30-12	CAP,TIP & NEEDLE KIT, PROLITE GRAVITY	B1	**224.54**
PROL-455-HV30-13	CAP,TIP & NEEDLE KIT, PROLITE GRAVITY	B1	**224.54**
PROL-455-HV30-14	CAP,TIP & NEEDLE KIT, PROLITE GRAVITY	B1	**224.54**
PROL-455-T110-11	CAP,TIP & NEEDLE KIT, PROLITE GRAVITY	B1	**224.54**
PROL-455-T110-12	CAP,TIP & NEEDLE KIT, PROLITE GRAVITY	B1	**224.54**
PROL-455-T110-13	CAP,TIP & NEEDLE KIT, PROLITE GRAVITY	B1	**224.54**
PROL-455-T110-14	CAP,TIP & NEEDLE KIT, PROLITE GRAVITY	B1	**224.54**
PROL-455-TE10-12	CAP,TIP & NEEDLE KIT, PROLITE GRAVITY	B1	**224.54**
PROL-455-TE10-13	CAP,TIP & NEEDLE KIT, PROLITE GRAVITY	B1	**224.54**
PROL-455-TE10-14	CAP,TIP & NEEDLE KIT, PROLITE GRAVITY	B1	**224.54**
PROL-455-TE20-12	CAP,TIP & NEEDLE KIT, PROLITE GRAVITY	B1	**224.54**
PROL-455-TE20-13	CAP,TIP & NEEDLE KIT, PROLITE GRAVITY	B1	**224.54**
PROL-455-TE20-14	CAP,TIP & NEEDLE KIT, PROLITE GRAVITY	B1	**224.54**
PROL-456-HV30-18	CAP,TIP & NEEDLE KIT, PROLITE SUCTION	B1	**224.54**
PROL-456-T110-16	CAP,TIP & NEEDLE KIT, PROLITE SUCTION	B1	**224.54**
PROL-456-TE10-16	CAP,TIP & NEEDLE KIT, PROLITE SUCTION	B1	**224.54**
PROL-456-TE10-18	CAP,TIP & NEEDLE KIT, PROLITE SUCTION	B1	**224.54**
PROL-456-TE10-20	CAP,TIP & NEEDLE KIT, PROLITE SUCTION	B1	**224.54**
PROL-456-TE20-16	CAP,TIP & NEEDLE KIT, PROLITE SUCTION	B1	**224.54**
PROL-456-TE20-18	CAP,TIP & NEEDLE KIT, PROLITE SUCTION	B1	**224.54**
PROL-457-TE20-085	CAP,TIP & NEEDLE KIT, PROLITE PRESSURE	B1	**224.54**
PROL-457-TE40-10	CAP,TIP & NEEDLE KIT, PROLITE PRESSURE	B1	**224.54**
PROL-457-TE40-14	CAP,TIP & NEEDLE KIT, PROLITE PRESSURE	B1	**224.54**
PROLT-DHV25-1213BK	GTI PROLITE GRAV/DGI GUN & CUP, BLACK	A3	**643.75**
PROLT-DHV25-1213BU	GTI PROLITE GRAV/DGI GUN & CUP, BLUE	A3	**643.75**
PROLT-DHV25-1314BK	GTI PROLITE GRAV/DGI GUN & CUP, BLACK	A3	**643.75**
PROLT-DHV30-1213BK	GTI PROLITE GRAV/DGI GUN & CUP, BLACK	A3	**643.75**
PROLT-DHV30-1213BU	GTI PROLITE GRAV/DGI GUN & CUP, BLUE	A3	**643.75**
PROLT-DHV30-1314BK	GTI PROLITE GRAV/DGI GUN & CUP, BLACK	A3	**643.75**
PROLT-DHV30-1314BU	GTI PROLITE GRAV/DGI GUN & CUP, BLUE	A3	**643.75**
PROLT-DT110-1213BK	GTI PROLITE GRAV/DGI GUN & CUP, BLACK	A3	**643.75**
PROLT-DT110-1213BU	GTI PROLITE GRAV/DGI GUN & CUP, BLUE	A3	**643.75**
PROLT-DT110-1314BK	GTI PROLITE GRAV/DGI GUN & CUP, BLACK	A3	**643.75**
PROLT-DT110-1314BU	GTI PROLITE GRAV/DGI GUN & CUP, BLUE	A3	**643.75**
PROLT-DTE10-1213BK	GTI PROLITE GRAV/DGI GUN & CUP, BLACK	A3	**643.75**
PROLT-DTE10-1213BU	GTI PROLITE GRAV/DGI GUN & CUP, BLUE	A3	**643.75**
PROLT-DTE10-1314BU	GTI PROLITE GRAV/DGI GUN & CUP, BLUE	A3	**643.75**
PROLT-DTE20-1213BK	GTI PROLITE GRAV/DGI GUN & CUP, BLACK	A3	**643.75**
PROLT-DTE20-1213BU	GTI PROLITE GRAV/DGI GUN & CUP, BLUE	A3	**643.75**
PROLT-DTE20-1314BK	GTI PROLITE GRAV/DGI GUN & CUP, BLACK	A3	**643.75**
PROLT-DTE20-1314BU	GTI PROLITE GRAV/DGI GUN & CUP, BLUE	A3	**643.75**
PROLT-GHV25-1112BK	GTI PROLITE GRAVITY GUN & CUP, BLACK	A3	**565.47**
PROLT-GHV25-1112BU	GTI PROLITE GRAVITY GUN & CUP, BLUE	A3	**565.47**
PROLT-GHV25-1112GD	GTI PROLITE GRAVITY GUN & CUP, GOLD	A3	**565.47**
PROLT-GHV25-1213BK	GTI PROLITE GRAVITY GUN & CUP, BLACK	A3	**565.47**
PROLT-GHV25-1213BU	GTI PROLITE GRAVITY GUN & CUP, BLUE	A3	**565.47**
PROLT-GHV25-1213GD	GTI PROLITE GRAVITY GUN & CUP, GOLD	A3	**565.47**
PROLT-GHV25-1314GD	GTI PROLITE GRAVITY GUN & CUP, GOLD	A3	**565.47**
PROLT-GHV30-12	GRAVITY GUN & CUP	A3	**554.14**
PROLT-GHV30-1213BK	GTI PROLITE GRAVITY GUN & CUP, BLACK	A3	**565.47**
PROLT-GHV30-1213BU	GTI PROLITE GRAVITY GUN & CUP, BLUE	A3	**565.47**
PROLT-GHV30-1213GD	GTI PROLITE GRAVITY GUN & CUP, GOLD	A3	**565.47**
PROLT-GHV30-13	GRAVITY GUN & CUP	A3	**554.14**
PROLT-GHV30-1314BK	GTI PROLITE GRAVITY GUN & CUP, BLACK	A3	**565.47**
PROLT-GHV30-1314BU	GTI PROLITE GRAVITY GUN & CUP, BLUE	A3	**565.47**
PROLT-GHV30-1314GD	GTI PROLITE GRAVITY GUN & CUP, GOLD	A3	**565.47**
PROLT-GT110-1213BK	GTI PROLITE GRAVITY GUN & CUP, BLACK	A3	**565.47**
PROLT-GT110-1213BU	GTI PROLITE GRAVITY GUN & CUP, BLUE	A3	**565.47**
PROLT-GT110-1213GD	GTI PROLITE GRAVITY GUN & CUP, GOLD	A3	**565.47**
PROLT-GT110-1314BK	GTI PROLITE GRAVITY GUN & CUP, BLACK	A3	**565.47**
PROLT-GT110-1314BU	GTI PROLITE GRAVITY GUN & CUP, BLUE	A3	**565.47**
PROLT-GT110-1314GD	GTI PROLITE GRAVITY GUN & CUP, GOLD	A3	**565.47**
PROLT-GTE10-1112GD	GTI PROLITE GRAVITY GUN & CUP, GOLD	A3	**565.47**
PROLT-GTE10-12	GRAVITY GUN & CUP	A3	**554.14**
PROLT-GTE10-1213BK	GTI PROLITE GRAVITY GUN & CUP, BLACK	A3	**565.47**
PROLT-GTE10-1213BU	GTI PROLITE GRAVITY GUN & CUP, BLUE	A3	**565.47**
PROLT-GTE10-1213GD	GTI PROLITE GRAVITY GUN & CUP, GOLD	A3	**565.47**
PROLT-GTE10-13	GRAVITY GUN & CUP	A3	**554.14**
PROLT-GTE10-1314BK	GTI PROLITE GRAVITY GUN & CUP, BLACK	A3	**565.47**
PROLT-GTE10-1314BU	GTI PROLITE GRAVITY GUN & CUP, BLUE	A3	**565.47**
PROLT-GTE10-1314GD	GTI PROLITE GRAVITY GUN & CUP, GOLD	A3	**565.47**
PROLT-GTE10-14	GRAVITY GUN & CUP	A3	**554.14**
PROLT-GTE10-16	GRAVITY GUN & CUP	A3	**554.14**
PROLT-GTE10-18	GRAVITY GUN & CUP	A3	**554.14**
PROLT-GTE10-20	GRAVITY GUN & CUP	A3	**554.14**
PROLT-GTE20-12	GRAVITY GUN & CUP	A3	**554.14**
PROLT-GTE20-1213BK	GTI PROLITE GRAVITY GUN & CUP, BLACK	A3	**565.47**
PROLT-GTE20-1213BU	GTI PROLITE GRAVITY GUN & CUP, BLUE	A3	**565.47**
PROLT-GTE20-1213GD	GTI PROLITE GRAVITY GUN & CUP, GOLD	A3	**565.47**
PROLT-GTE20-13	GRAVITY GUN & CUP	A3	**554.14**
PROLT-GTE20-1314BK	GTI PROLITE GRAVITY GUN & CUP, BLACK	A3	**565.47**
PROLT-GTE20-1314BU	GTI PROLITE GRAVITY GUN & CUP, BLUE	A3	**565.47**
PROLT-GTE20-1314GD	GTI PROLITE GRAVITY GUN & CUP, GOLD	A3	**565.47**
PROLT-GTE20-14	GRAVITY GUN & CUP	A3	**554.14**
PROLT-PT110-085BK	PRESSURE FEED PROLITE SPRAYGUN	A2	**580.92**
PROLT-PT110-10BK	PRESSURE FEED PROLITE SPRAYGUN	A2	**580.92**
PROLT-PT110-14BK	PRESSURE FEED PROLITE SPRAYGUN	A2	**580.92**
PROLT-PT110-16BK	PRESSURE FEED PROLITE SPRAYGUN	A2	**580.92**
PROLT-PTE10-085BK	PRESSURE FEED PROLITE SPRAYGUN	A2	**580.92**
PROLT-PTE10-10BK	PRESSURE FEED PROLITE SPRAYGUN	A2	**580.92**
PROLT-PTE10-12BK	PRESSURE FEED PROLITE SPRAYGUN	A2	**580.92**
PROLT-PTE10-14BK	PRESSURE FEED PROLITE SPRAYGUN	A2	**580.92**
PROLT-PTE10-18BK	PRESSURE FEED PROLITE SPRAYGUN	A2	**580.92**
PROLT-PTE20-085BK	PRESSURE FEED PROLITE SPRAYGUN	A2	**580.92**
PROLT-PTE20-10BK	PRESSURE FEED PROLITE SPRAYGUN	A2	**580.92**
PROLT-PTE20-12BK	PRESSURE FEED PROLITE SPRAYGUN	A2	**580.92**
PROLT-PTE20-14BK	PRESSURE FEED PROLITE SPRAYGUN	A2	**580.92**
PROLT-PTE20-16BK	PRESSURE FEED PROLITE SPRAYGUN	A2	**580.92**
PROLT-PTE20-18BK	PRESSURE FEED PROLITE SPRAYGUN	A2	**580.92**
PROLT-PTE30-085BK	PRESSURE FEED PROLITE SPRAYGUN	A2	**580.92**
PROLT-PTE30-10BK	PRESSURE FEED PROLITE SPRAYGUN	A2	**580.92**
PROLT-PTE30-12BK	PRESSURE FEED PROLITE SPRAYGUN	A2	**580.92**
PROLT-PTE30-14BK	PRESSURE FEED PROLITE SPRAYGUN	A2	**580.92**
PROLT-PTE40-085BK	PRESSURE FEED PROLITE SPRAYGUN	A2	**580.92**
PROLT-PTE40-10BK	PRESSURE FEED PROLITE SPRAYGUN	A2	**580.92**
PROLT-PTE40-12BK	PRESSURE FEED PROLITE SPRAYGUN	A2	**580.92**
PROLT-PTE40-14BK	PRESSURE FEED PROLITE SPRAYGUN	A2	**580.92**
PROLT-PTE40-18BK	PRESSURE FEED PROLITE SPRAYGUN	A2	**580.92**
PROLT-SHV30-16BK	SUCTION FEED PROLITE SPRAYGUN	A2	**695.25**
PROLT-SHV30-18BK	SUCTION FEED PROLITE SPRAYGUN	A2	**695.25**
PROLT-SHV30-20BK	SUCTION FEED PROLITE SPRAYGUN	A2	**695.25**
PROLT-ST110-18BK	SUCTION FEED PROLITE SPRAYGUN	A2	**695.25**
PROLT-ST110-20BK	SUCTION FEED PROLITE SPRAYGUN	A2	**695.25**
PROLT-STE10-16BK	SUCTION FEED PROLITE SPRAYGUN	A2	**695.25**
PROLT-STE10-18BK	SUCTION FEED PROLITE SPRAYGUN	A2	**695.25**
PROLT-STE10-20BK	SUCTION FEED PROLITE SPRAYGUN	A2	**695.25**
PROLT-STE20-16BK	SUCTION FEED PROLITE SPRAYGUN	A2	**695.25**
PROLT-STE20-18BK	SUCTION FEED PROLITE SPRAYGUN	A2	**695.25**
PROLT-STE20-20BK	SUCTION FEED PROLITE SPRAYGUN	A2	**695.25**
PROPL-455-TE40-12	CAP.TIP & NEEDLE KIT, PROLITE	B1	**224.54**
PROPL-455-TE40-14	CAP.TIP & NEEDLE KIT, PROLITE	B1	**224.54**
PROV-17-K	VISOR & FACE SEAL	J2	**117.42**
PROV-20-K	BELT AND REGULATOR KIT	J2	**235.87**
PROV-21-K	PEAK	J2	**20.81**
PROV-22-K10	TEAR-OFF VISORS,PACK OF 10	J2	**20.81**
PROV-22-K50	TEAR-OFF VISORS,PACK OF 50	J2	**80.96**
PROV-24-K	BREATHING AIR PIPE KIT	J2	**61.49**
PROV-25-K	VISOR FACE SEAL AND AIR TUBE	J2	**119.48**
PROV-26-K	STORAGE BAG	J2	**26.68**
PROV-27-K4	FILTER ELEMENT,PACK OF 4	J2	**106.09**
PROV-29-K	HEAD PIECE & BREATHING TUBE	J2	**233.81**
PROV-30-K	SPACERS,STUD & KNOB KIT	J2	**35.43**

PROV-31-K	FILTER CAP AND SEAL KIT	J2	**26.68**
PROV-32-K	Y-PIECE ASSEMBLY	J2	**80.24**
PROV-33-K	QD CONNECTOR KIT	J2	**39.55**
PROV-34-K4	FILTER CAP SEAL(KIT OF 4)	J2	**24.93**
PROV-36-K10	TEAR-OFF VISORS,PACK OF 10	J2	**22.45**
PROV-36-K50	TEAR-OFF VISORS,PACK OF 50	J2	**87.24**
PROV-37-K	BELT AND REGULATOR KIT	J2	**260.59**
PROV-38-K	VISOR FACE SEAL AND AIR TUBE	J2	**142.14**
PROV-39-K	HOOD	J2	**98.78**
PROV-406-K	GUN HOSE ASSEMBLY	J2	**90.13**
PROV-40-K	ADJUSTABLE HEADPIECE	J2	**50.47**
PROV-41-K	HEAD PIECE & BREATHING TUBE	J2	**334.75**
PROV-42-K	QD CONNECTOR KIT	J2	**42.64**
PROV-51-K	BELT & BUCKLE ASSEMBLY	J2	**53.56**
PROV-52-K2	LINT FREE BROW BAND KIT OF 2	J2	**31.62**
PROV-650	VISOR, COMPLETE UNIT	J1	**517.06**
PT-32	HANDLE	D2	**4.02**
PT-33-1	LID GASKET (SANTOPRENE)	D2	**33.37**
PT-78-K10	2.8 GALL LINER (PACK OF 10)	D2	**53.87**
PT-78-K60	2.8 GALL LINER (PACK OF 60)	D2	**248.23**
QDL-4808	Q/D FLUID CONNECTION	B1	**83.12**
SER-3414-MF	DVFR/DMG BALL VALVE	J2	**19.06**
SGK-12-13-K	FLUID TIP 1.3mm GRAVITY	B1	**29.15**
SGK-12-14-K	FLUID TIP 1.4mm GRAVITY	B1	**29.15**
SGK-12-20-K	FLUID TIP 2.0mm GRAVITY	B1	**29.15**
SGK-14-18-K	FLUID TIP 1.8mm GRAVITY/SUCTION	B1	**29.15**
SGK-23-K	RETAINING RING ASSEMBLY	B1	**14.01**
SGK-402-14-K	FLUID NEEDLE 1.4 mm PRESSURE	B1	**13.49**
SGK-414-K	FLUID NEEDLE 1.4MM GRAVITY	B1	**13.49**
SGK-418-K	FLUID NEEDLE 1.8 mm GRAVITY	B1	**13.49**
SGK-430-18-K	FLUID NEEDLE 1.8 mm SUCTION	B1	**13.49**
SGK-43-K10	FLUID TIP SEAL (PACK OF 10)	B1	**7.00**
SGK-53-622-K	PRESSURE AIR CAP	B1	**33.37**
SHIM-3	SHIM-MASK, PACK OF 3	J1	**24.41**
SLG-40-K10	NEEDLE PACKING (PACK OF 10)	B1	**13.08**
SLG-450	PLASTIC GRAVITY CUP & LID	D1	**26.99**
SLG-460	ALUMINIUM GRAVITY CUP & PUSH LID (600cc)	D2	**38.83**
SLG-470	ALUMINIUM GRAVITY CUP & PUSH LID (250cc)	D2	**32.34**
SLG-610-K10	10 OFF STARTING LINE GRAVITY GUN KITS - Qty 10+	N	**POA**
SLG-610-K10	10 OFF STARTING LINE GRAVITY GUN KITS - Qty 5-9	N	**POA**
SLG-610-K10	10 OFF STARTING LINE GRAVITY GUN KITS - Qty 1-4	N	**POA**
SLG-620-13-K10	10 OFF COMPLIANT 1.3 SLG SPRAYGUNS - Qty 10+	N	**POA**
SLG-620-13-K10	10 OFF COMPLIANT 1.3 SLG SPRAYGUNS - Qty 5-9	N	**POA**
SLG-620-13-K10	10 OFF COMPLIANT 1.3 SLG SPRAYGUNS - Qty 1-4	N	**POA**
SLG-620-18-K10	10 OFF COMPLIANT 1.8 SLG SPRAYGUNS - Qty 10+	N	**POA**
SLG-620-18-K10	10 OFF COMPLIANT 1.8 SLG SPRAYGUNS - Qty 5-9	N	**POA**
SLG-620-18-K10	10 OFF COMPLIANT 1.8 SLG SPRAYGUNS - Qty 1-4	N	**POA**
SLG-650-K4	KIT OF 4 OFF 2 GUN SPRAY KIT - Qty 25+	N	**POA**
SLG-650-K4	KIT OF 4 OFF 2 GUN SPRAY KIT - Qty 12-24	N	**POA**
SLG-650-K4	KIT OF 4 OFF 2 GUN SPRAY KIT - Qty 8-11	N	**POA**
SLG-650-K4	KIT OF 4 OFF 2 GUN SPRAY KIT - Qty 3-7	N	**POA**
SLG-650-K4	KIT OF 4 OFF 2 GUN SPRAY KIT - Qty 1-2	N	**POA**
SN-11	BLANKING PLUG	B1	**9.06**
SN-17-1-K	SPRAYHEAD, PLATE & SEAL KIT	B1	**44.50**
SN-18-1-K2	SPRAY HEAD SEAL. KIT OF 2	B1	**5.67**
SN-21-K	TRIGGER. STUD & SCREW KIT	B1	**35.43**
SN-26-K4	COLOUR IDENTIFICATION RING KIT	B1	**2.78**
SN-31-K	MOULDED CAGE KIT	B1	**34.09**
SN-34-K5	REAR SEAL KIT OF 5	B1	**21.53**
SN-402-K	AIR VALVE ASSEMBLY KIT	B1	**87.24**
SN-404-K	NEEDLE PACKING KIT	B1	**14.32**
SN-405-K5	TRIGGER STUD & SCREW(KIT OF 5)	B1	**66.95**
SN-406	TOOL KIT	B1	**19.36**
SN-40-K	AIR INLET FITTING	B1	**14.52**
SN-41-K	BAFFLE PLATE	B1	**7.62**
SN-423-K3	NEEDLE SPRING ASSY (KIT OF 3)	B1	**21.73**
SN-42-K	TRIGGER KIT	B1	**18.03**
SN-4-K3	'PRO' NEEDLE SPRING AND PAD	B1	**18.75**
SN-52-K5	LIP SEAL(PACK OF 5)	B1	**15.55**
SN-57-K5	INSERT KIT OF 5	B1	**12.77**
SN-63-K	TRIGGER, STUD AND SCREW KIT	B1	**19.36**
SN-66-K	HOUSING & SEAL KIT	B1	**18.33**
SN-67-C-K	FLUID NEEDLE ADJUSTING KNOB	B1	**11.54**
SN-69-K	SPRAY HEAD & SEAL KIT	B1	**44.50**
SN-6-K	BODY BUSHING & SEAL KIT	B1	**40.07**
SN-71X-K2	O RING (KIT OF 2)	B1	**5.87**
SN-81-K	NEEDLE ADJUSTING KNOB	B1	**29.15**
SN-8-K5	BODY BUSHING GASKET - KIT OF FIVE	B1	**12.88**
SN-9-K	AIR INLET ADAPTOR	B1	**19.36**
SP-100-510-K	BOXED AIRCAP/RING.TRANSTECH	B1	**139.05**
SP-100-522-K	BOXED AIRCAP/RING.TRANSTECH	B1	**139.05**
SP-100-523-K	BOXED AIRCAP/RING.TRANSTECH	B1	**139.05**
SP-100-598-K	COMPACT AIRCAP HVLP	B1	**139.05**
SP-200S-085-K	BOXED FLUID TIP (COMPACT)	B1	**100.73**
SP-200S-10-K	BOXED FLUID TIP (COMPACT)	B1	**100.73**
SP-200S-11-K	BOXED FLUID TIP (COMPACT)	B1	**100.73**
SP-200S-12-K	BOXED FLUID TIP (COMPACT)	B1	**100.73**
SP-200S-13-K	BOXED FLUID TIP (COMPACT)	B1	**100.73**
SP-200S-14-K	BOXED FLUID TIP (COMPACT)	B1	**100.73**
SP-200S-16-K	BOXED FLUID TIP (COMPACT)	B1	**100.73**
SP-200S-18-K	BOXED FLUID TIP (COMPACT)	B1	**100.73**
SP-200S-20-K	BOXED FLUID TIP (COMPACT)	B1	**100.73**
SP-200S-22-K	BOXED FLUID TIP (COMPACT)	B1	**100.73**
SP-300S-085-K	BOXED FLUID NEEDLE (COMPACT)	B1	**31.72**
SP-300S-10-K	BOXED FLUID NEEDLE (COMPACT)	B1	**31.72**
SP-300S-11-K	BOXED FLUID NEEDLE (COMPACT)	B1	**31.72**
SP-300S-12-K	BOXED FLUID NEEDLE (COMPACT)	B1	**31.72**
SP-300S-13-K	BOXED FLUID NEEDLE (COMPACT)	B1	**31.72**
SP-300S-14-K	BOXED FLUID NEEDLE (COMPACT)	B1	**31.72**
SP-300S-16-K	FLUID NEEDLE (COMPACT)	B1	**31.72**
SP-300S-18-K	FLUID NEEDLE (COMPACT)	B1	**31.72**
SP-300S-20-K	FLUID NEEDLE (COMPACT)	B1	**31.72**
SP-300S-22-K	BOXED FLUID NEEDLE (COMPACT)	B1	**31.72**
SP-401-K	SPREADER VALVE (COM Pr & Suct)	B1	**27.60**
SP-402-K	AIR FLOW VALVE ASSY(COM GUN)	B1	**69.11**
SP-610-K	FLUID INLET & SEAL (COMPACT)	B1	**19.36**
SP-611-K	AIR INLET (COMPACT)	B1	**19.36**
SP-612-K	AIR VALVE HOUSING & SEAL(COM)	B1	**21.94**
SP-614-K	NEEDLE ADJ.SCREW (COMPACT)	B1	**17.61**
SP-617-CR-K	TRIGGER, STUD AND SCREW KIT	B1	**35.43**
SP-622-K5	NEEDLE SPRING-5 PACK(COMPACT)	B1	**18.03**
SP-623-K5	SEPARATOR-5 PACK (COMPACT S/P)	B1	**11.43**
SP-626-K5	SEPARATOR-5 PACK(COMPACT Grav)	B1	**22.45**
SPK-101-K	AIR VALVE SERV.KIT (COMPACT)	B1	**67.88**
SPK-102-K	RETAINING RING ASSY (COMPACT)	B1	**58.71**
SPK-103-K	UPGRADE KIT	B1	**64.68**
SPK-401-085	SERVICE KIT (COMPACT)	B1	**158.62**
SPK-401-10	SERVICE KIT (COMPACT)	B1	**158.62**
SPK-401-11	SERVICE KIT (COMPACT)	B1	**158.62**
SPK-401-12	SERVICE KIT (COMPACT)	B1	**158.62**
SPK-401-13	SERVICE KIT (COMPACT)	B1	**158.62**
SPK-401-14	SERVICE KIT (COMPACT)	B1	**158.62**
SPK-401-16	SERVICE KIT (COMPACT)	B1	**158.62**
SPK-401-18	SERVICE KIT (COMPACT)	B1	**158.62**
SPK-401-20	SERVICE KIT (COMPACT)	B1	**158.62**
SPK-401-22	SERVICE KIT (COMPACT)	B1	**158.62**
SPN-12-K	PRO VISOR SPANNER	J2	**13.70**
SPN-5	SPANNER - GENERAL GUNS	B1	**9.89**
SPN-8-K2	TORX KEY - KIT OF 2	B1	**9.89**
SRI-16-K5	SEAL (PACK OF 5)	B1	**13.09**
SRI-17-K	BODY BUSHING & SEAL KIT	B1	**13.97**
SRI-18-K2	NEEDLE SPRING (PACK OF 2)	B1	**7.15**
SRI-19-K2	NEEDLE ADJ.KNOB (PACK OF 2)	B1	**18.70**
SRI-2-07-K	BOXED FLUID TIP & SEAL	B1	**133.20**
SRI-2-08-K	BOXED FLUID TIP & SEAL	B1	**87.84**
SRI-20-K	AIR INLET ADAPTOR	B1	**POA**
SRI-2-10-K	BOXED FLUID TIP & SEAL	B1	**POA**
SRI-2-12-K	BOXED FLUID TIP & SEAL	B1	**POA**
SRI-23-K2	AIR VALVE SPRING (PACK OF 2)	B1	**POA**
SRI-35-K5	AIR CAP SEAL (PACK OF 5)	B1	**POA**
SRI-37-K	BOXED FLUID NEEDLE	B1	**POA**
SRI-39	FLUID INLET ADAPTOR	D2	**POA**
SRI-3-K	BOXED FLUID NEEDLE	B1	**POA**
SRI-401-K	SPREADER VALVE ASSY	B1	**POA**
SRI-402-K	CHEATER(AIR FLOW) VALVE ASSY	B1	**POA**
SRI-404-K	AIR VALVE ASSY	B1	**POA**
SRI-407-200	AIR CAP/RET.RING-ROUND SPRAY	B1	**POA**
SRI-407-205	AIR CAP/RET.RING - HVLP	B1	**POA**
SRI-407-210	AIR CAP/RET.RING - COMPLIANT	B1	**POA**
SRI-407-215	AIR CAP/RET.RING - HVLP	B1	**POA**
SRI-40-K	AIR INLET ADAPTOR (SRI-W)	B1	**POA**
SRI-411-K3	NEEDLE PACKINGS(3) + NUT(1)	B1	**POA**
SRI-412-K	TRIGGER STUD & SCREW KIT	B1	**POA**
SRI-414-K2	GRAVITY CUP LID (PACK OF 2)	B1	**15.55**
SRI-415-K	SPREADER VALVE ASSY (SRI-W)	B1	**POA**
SRI-416	SERVICE KIT	B1	**POA**
SRI-42-K3	SRI CUP FILTER (KIT OF 3)	D2	**20.81**
SRI-440-07	FLUID TIP/SEAL & NEEDLE KIT	B1	**POA**
SRI-440-08	FLUID TIP/SEAL & NEEDLE KIT	B1	**POA**
SRI-440-10	FLUID TIP/SEAL & NEEDLE KIT	B1	**POA**
SRI-440-12	FLUID TIP/SEAL & NEEDLE KIT	B1	**POA**
SRI-450-210-08	CAP.TIP/SEAL & NEEDLE KIT	B1	**POA**
SRI-450-210-10	CAP.TIP/SEAL & NEEDLE KIT	B1	**POA**
SRI-450-210-12	CAP.TIP/SEAL & NEEDLE KIT	B1	**POA**
SRI-450-215-08	CAP.TIP/SEAL & NEEDLE KIT	B1	**POA**
SRI-50-K2	SPANNER (PACK OF 2)	B1	**12.67**
SRI-510	GRAVITY CUP KIT 0.15L	B1	**43.78**
SRI-51-K12	FUNNEL (PACK OF 12)	B1	**19.36**
SRI-65-K2	CLEANING BRUSH (PACK OF 2)	B1	**9.06**
SRI-6-K5	SEPARATOR (PACK OF 5)	B1	**POA**
SRI-8-K6	SPARE CUP LIDS (PACK OF 6)	D2	**13.60**
SRI-9-K	TRIGGER	B1	**POA**
SRIPRO-100-HS1-K	BOXED AIRCAP ASSEMBLY	B1	**93.73**
SRIPRO-100-RS1-K	AIRCAP ASSEMBLY ROUND SPRAY	B1	**93.73**
SRIPRO-100-TS1-K	BOXED AIRCAP ASSEMBLY	B1	**93.73**
SRIPRO-102-HV5-K	AIRCAP ASSEMBLY	B1	**93.73**
SRIPRO-102-MC1-K	AIRCAP ASSEMBLY	B1	**93.73**
SRIPRO-102-RS1-K	AIRCAP ASSEMBLY	B1	**93.73**
SRIPRO-102-TE5-K	AIRCAP ASSEMBLY	B1	**93.73**
SRIPRO-200-08-K	BOXED FLUID NOZZLE 0.8	B1	**67.88**
SRIPRO-200-10-K	BOXED FLUID NOZZLE 1.0	B1	**67.88**
SRIPRO-200-12-K	BOXED FLUID NOZZLE 1.2	B1	**67.88**
SRIPRO-200-14-K	BOXED FLUID NOZZLE 1.4	B1	**67.88**
SRIPRO-210-06M-K	FLUID NOZZLE - 0.6	B1	**67.88**

SRIPRO-2-K5	SEPARATOR (PACK OF 5)	B1	**11.12**
SRIPRO-300-08-10-K	BOXED FLUID NEEDLE 08/10	B1	**31.31**
SRIPRO-300-12-14-K	BOXED FLUID NEEDLE 12/14	B1	**31.31**
SRIPRO-310-06M-K	FLUID NEEDLE - MICRO	B1	**31.31**
SRIPRO-401-K	SPREADER VALVE	B1	**26.57**
SRIPRO-402-K	SPREADER VALVE	B1	**26.57**
SRIPRO-440-08	FLUID TIP/SEAL & NEEDLE KIT	B1	**93.83**
SRIPRO-440-10	FLUID TIP/SEAL & NEEDLE KIT	B1	**93.83**
SRIPRO-440-12	FLUID TIP/SEAL & NEEDLE KIT	B1	**93.83**
SRIPRO-440-14	FLUID TIP/SEAL & NEEDLE KIT	B1	**93.83**
SRIPRO-450-HS1-08	CAP,TIP, NEEDLE - SRIPRO	B1	**180.25**
SRIPRO-450-HS1-10	CAP,TIP, NEEDLE - SRIPRO	B1	**180.25**
SRIPRO-450-HS1-12	CAP,TIP, NEEDLE - SRIPRO	B1	**180.25**
SRIPRO-450-HS1-14	CAP,TIP, NEEDLE - SRIPRO	B1	**180.25**
SRIPRO-450-TS1-08	CAP,TIP, NEEDLE - SRIPRO	B1	**180.25**
SRIPRO-450-TS1-10	CAP,TIP, NEEDLE - SRIPRO	B1	**180.25**
SRIPRO-450-TS1-12	CAP,TIP, NEEDLE - SRIPRO	B1	**180.25**
SRIPRO-450-TS1-14	CAP,TIP, NEEDLE - SRIPRO	B1	**180.25**
SRIPROL-450-HV5-08	CAP,TIP, NEEDLE - SRIPROL	B1	**180.25**
SRIPROL-450-HV5-10	CAP,TIP, NEEDLE - SRIPROL	B1	**180.25**
SRIPROL-450-HV5-12	CAP,TIP, NEEDLE - SRIPROL	B1	**180.25**
SRIPROL-450-HV5-14	CAP,TIP, NEEDLE - SRIPROL	B1	**180.25**
SRIPROL-450-MC1-06	CAP,TIP, NEEDLE - SRIPROL	B1	**180.25**
SRIPROL-450-TE5-08	CAP,TIP, NEEDLE - SRIPROL	B1	**180.25**
SRIPROL-450-TE5-10	CAP,TIP, NEEDLE - SRIPROL	B1	**180.25**
SRIPROL-450-TE5-12	CAP,TIP, NEEDLE - SRIPROL	B1	**180.25**
SRIPROL-450-TE5-14	CAP,TIP, NEEDLE - SRIPROL	B1	**180.25**
SRIPROL-HV5-08	SRIPRO LITE HVLP SPRAYGUN KIT	A4	**404.79**
SRIPROL-HV5-10	SRIPRO LITE HVLP SPRAYGUN KIT	A4	**404.79**
SRIPROL-HV5-12	SRIPRO LITE HVLP SPRAYGUN KIT	A4	**404.79**
SRIPROL-HV5-14	SRIPRO LITE HVLP SPRAYGUN KIT	A4	**404.79**
SRIPROL-MC1-06	SRIPRO LITE SPRAYGUN KIT	A4	**404.79**
SRIPROL-RS1-08	SRIPRO LITE SPRAYGUN KIT	A4	**404.79**
SRIPROL-RS1-10	SRIPRO LITE SPRAYGUN KIT	A4	**404.79**
SRIPROL-RS1-12	SRIPRO LITE SPRAYGUN KIT	A4	**404.79**
SRIPROL-RS1-14	SRIPRO LITE SPRAYGUN KIT	A4	**404.79**
SRIPROL-TE5-08	SRIPRO LITE SPRAYGUN KIT	A4	**404.79**
SRIPROL-TE5-10	SRIPRO LITE SPRAYGUN KIT	A4	**404.79**
SRIPROL-TE5-12	SRIPRO LITE SPRAYGUN KIT	A4	**404.79**
SRIPROL-TE5-14	SRIPRO LITE SPRAYGUN KIT	A4	**404.79**
SS-2707	DRAIN COCK	D2	**6.80**
SSG-8069-K5	O-RING KIT OF 5	B2	**POA**
SSP-1939	STR ELBOW. 90 ° 3/8NPT	D2	**20.39**
SSP-30-ZN	SWIVEL ADAPTOR	C2	**28.43**
SSP-462-ZN	HEX NIPPLE 1/4" NPT	D2	**2.27**
TEK-405-K	RETAINING RING WITH SEALS	B1	**44.50**
TGC-407-1-K3	DRIP FREE VALVE (PACK OF 3)	D2	**4.12**
TGC-9-K5	LID GASKET (PACK OF 5)	D2	**24.93**
TIA-4355	SAFETY VALVE (FOR KBII)	D2	**17.61**
TIA-5080-CE	SAFETY VALVE 80PSI CE APPROVED	D2	**16.17**
VIZI-4-K50	TEAR-OFF VISOR COVERS(50 PACK)	J2	**86.62**
VIZI-5	GUN HOSE 1.2M	J2	**41.51**
VRIPRO-100-TV1-K	TRANSTECH AIR CAP & RETAINING RING	B1	**139.05**
VRIPRO-100-TV2-K	TRANSTECH AIR CAP & RETAINING RING	B1	**139.05**
VS-522	FILTER - BSPF CONNECTION	C2	**257.50**
VS-55	FILTER SCREEN 100 MESH NYLON	D2	**4.33**
VS-56	FILTER SCREEN 60 MESH NYLON	D2	**4.53**
VSA-3-K5	FILTER ELEMENT 60 MICRON(GR) KIT OF 5	D2	**5.87**
VSA-4-K5	FILTER ELEMENT 112 MICRON(BL) KIT OF 5	D2	**5.87**
VSA-512	STS STRAINER ASSEMBLY 3/8 UNIV	C2	**48.51**
XA-12	COALESCER FILTER ELEMENT	J2	**180.25**

CONDITIONS OF SALE
CARLISLE FLUID TECHNOLOGIES UK LTD ("CFTUK")

1. INTERPRETATION

1.1 In these Conditions:

Business Day: a day (other than a Saturday, Sunday or public holiday) when banks in London are open for business.

Buyer: Is the person who accepts CFTUK's quotation or whose order is accepted by CFTUK.

Conditions: Are these conditions of sale and (unless the context otherwise requires) includes any special terms on the face of CFTUK's quotation or acceptance of the Buyer's order.

Contract: Is the contract for the purchase and sale of the Goods and/or supply of services.

Goods: Are the goods which CFTUK is to supply.

2. BASIS OF THE SALE

2.1. Subject to CFTUK's quotation, all Goods are sold and services supplied subject to these Conditions to the exclusion of any other terms and conditions.

2.2. No variation to these Conditions shall be binding unless agreed in writing by a general manager of CFTUK.

2.3. CFTUK's employees or agents are not authorised to make any representations unless confirmed by CFTUK in writing. The Buyer acknowledges that it does not rely on, and irrevocably waives any claim it may have for damages for or the right to rescind the Contract for any such representations which are not so confirmed (unless such representations were fraudulently made).

2.4. Any advice or recommendation given by CFTUK or its employees or agents to the Buyer or its employees or agents which is not confirmed in writing by CFTUK is followed or acted upon entirely at the Buyer's own risk and CFTUK shall not be liable for any such advice or recommendation which is not so confirmed.

2.5. Any typographical, clerical or other error or omission in any sales literature, quotation, Europartners Price List, acceptance of offer, invoice or other document or information issued by CFTUK shall be subject to correction without any liability on the part of CFTUK.

3. ORDERS AND SPECIFICATIONS

3.1. Quotations are valid for 60 days only. No order submitted by the Buyer shall be deemed to be accepted by CFTUK unless and until confirmed in writing by CFTUK.

3.2. The Buyer is responsible for ensuring the accuracy of the terms of any order and for giving CFTUK any necessary information within a sufficient time to enable CFTUK to perform the Contract.

3.3. The quantity and description of and any specification for the Goods or services shall be those set out in CFTUK's quotation (if accepted by the Buyer) or CFTUK's acceptance of the Buyer's order.

3.4. CFTUK reserves the right to make any changes in the specification of the Goods (including materials and components) which are required to conform with any applicable law or, which do not materially affect their quality or performance.

3.5. An order once accepted by CFTUK may only be cancelled with its written agreement and the Buyer shall indemnify CFTUK in full against all loss (including loss of profit), costs (including labour and materials) and damages incurred by CFTUK.

4. DRAWINGS AND SPECIFICATIONS

4.1. Any specifications or drawings supplied remain CFTUK's sole property and are subject to recall at any time before CFTUK's quotation is accepted. Any drawings supplied are not to be used for construction purposes. Where CFTUK's quotation includes a drawing reference, copy of any approved prints or equipment data sheets, these must be signed by the Buyer and must accompany the equipment purchase order.

4.2. Before signing the prints the Buyer shall check equipment size, location of building, and all interferences as shown on the drawings, data sheets etc and clearances and note clearly and comprehensively any changes or interferences on the prints.

4.3. If Goods are to be made or any process is to be applied in accordance with a specification, drawing or design submitted by the Buyer, the Buyer shall indemnify CFTUK against all loss, damages, costs and expenses awarded against or incurred by CFTUK in connection with or paid or agreed to be paid by CFTUK in settlement of any claim for infringement of any third party rights which results from CFTUK's use of such material.

4.4. If any claim is made against the Buyer that the Goods supplied or their proper use infringe the intellectual property rights of any other person, CFTUK shall indemnify the Buyer against all damages, costs and expenses awarded against the Buyer in connection with the claim provided that:

4.4.1. CFTUK is given full control of any proceedings or negotiations in connection with any such claim;

4.4.2. the Buyer shall pay to CFTUK all damages and costs (if any) awarded in favour of the Buyer which are payable by, or agreed with the consent of the Buyer (which consent shall not be unreasonably withheld) to be paid by, any other party in respect of any such claim; and

4.4.3. without prejudice to any duty of the Buyer at common law, CFTUK may require the Buyer to take such steps as CFTUK may reasonably require to mitigate or reduce any such loss, damages, costs or expenses for which CFTUK is liable to indemnify the Buyer under this condition.

5. PREPARATION OF SITE

5.1. The Buyer shall obtain all necessary licences, permits and permissions.

5.2. The Buyer shall clear the site for installation and make it ready for the reception of the Goods. The Buyer shall keep the site free from water, debris and obstructions, and make required alterations to buildings and other equipment if required for the proper clearance and support of the Goods.

5.3. The Buyer shall ensure that CFTUK shall not be delayed by the operations of others (including the Buyer) or the Buyer's failure to provide the conditions and facilities required. If such delays cause extra visits by CFTUK, these will be charged in addition.

5.4. The Buyer shall, at its own risk, unload the Goods and store them close to the point of erection, provide safe and convenient storage room for tools and materials, provide adequate work room for CFTUK personnel, give proper care to and provide insurance against loss by fire and theft for all materials and equipment prior to, during and after installation.

6. INSTALLATION LIABILITY

6.1. The Buyer shall provide the necessary foundations required, carry out cutting away and making good, and grouting in foundation bolts etc, and will provide a level concrete floor for the plant of adequate strength. The Buyer shall be entirely responsible for the exact siting of the Goods to meet the Buyer's requirements.

6.2. All gas, water, electrical and compressed air services (including interconnecting wiring) shall be provided by the Buyer. All building work such as cutting holes etc for stacks to be undertaken by the Buyer.

6.3. If CFTUK undertakes any of the work detailed in the previous paragraphs to complete installation, such work shall be charged in addition and CFTUK shall not be responsible for any

consequential damage.

7. PLANT ACCEPTANCE/TAKING OVER

7.1. The Goods shall be deemed to have been accepted at the earlier of:

7.1.1. When installation has been completed and the Goods have passed or are deemed to have passed all tests provided for in CFTUK's proposal; or

7.1.2. One calendar month after the Goods shall have been put into use.

7.2. The time of acceptance shall not be delayed because of additions, minor omissions or defects which do not materially affect the use of the Goods or if the Buyer is preventing CFTUK from completing the Contract.

8. PRICE

8.1. The price shall be CFTUK's quoted price (or if a quoted price is no longer valid), the price stated in CFTUK's acknowledgement of order. Prices are ex works.

8.2. CFTUK may, by giving notice to the Buyer at any time before delivery, increase the price to reflect any increase in the cost to CFTUK which is due to any factor beyond the control of CFTUK.

8.3. Any applicable value added tax or other taxes or duties are payable by the Buyer in addition.

8.4. Goods for export will be packed in good quality export cases at the Buyer's cost. Any special packing requirements of the Buyer will attract an additional charge. Packing for parcel post or air freight will be in an appropriately economic manner using cartons and/or parcels.

9. TERMS OF PAYMENT

9.1. Payment shall be made in accordance with CFTUK's quotation.

9.2. CFTUK may recover the price, notwithstanding that delivery may not have taken place and the property in the Goods has not passed. The time of payment shall be of the essence of the Contract.

9.3. CFTUK may charge the Buyer interest (both before and after any judgement) on the amount unpaid, at the rate of 4 per cent per annum above the base rate from time to time of JP Morgan until payment in full is made.

10. DELIVERY

10.1. The method of delivery shall be in accordance with CFTUK's quotation. The Buyer must obtain any import or export licences required.

10.2. Any dates given for delivery of the Goods or provision of services are approximate only and CFTUK shall not be liable for any delay howsoever caused. Time for delivery or performance shall not be of the essence.

10.3. The Goods may be delivered in instalments. Each delivery shall constitute a separate contract and failure by CFTUK to deliver any one or more of the instalments in accordance with these Conditions or any claim by the Buyer in respect of any one or more instalments shall not entitle the Buyer to treat the Contract as a whole as repudiated.

10.4. If the Buyer fails to take delivery of the Goods or fails to give CFTUK adequate delivery instructions within 14 days of their availability CFTUK may:

10.4.1. store the Goods until actual delivery and charge the Buyer for the costs (including insurance) of storage; or

10.4.2. sell the Goods at the best price readily obtainable and (after deducting all storage, selling and other expenses) account to the Buyer for the excess over sums owing by the Buyer or charge the Buyer for any shortfall.

10.5. Where CFTUK arranges forwarding of the Goods, the Buyer shall notify CFTUK and the carrier in writing within 48 hours of delivery of any damage to the Goods or shortage in delivery.

10.6. The Buyer shall inspect the Goods on receipt and notify CFTUK of any defects within 7 days of delivery failing which the Buyer shall be deemed to have accepted them. After acceptance the Buyer shall not be entitled to reject Goods. The Buyer shall not be entitled to reject the Goods for any defect or failure which is so slight that it would be unreasonable to reject them.

11. RISK AND PROPERTY

11.1. Risk in the Goods shall pass to the Buyer when CFTUK notifies the Buyer that the Goods are available for collection or when the Goods leave CFTUK's premises, whichever is the earlier.

11.2. Notwithstanding any other provision of these Conditions, the property in the Goods shall not pass to the Buyer until CFTUK has received in cash or cleared funds payment in full of all sums due under the Contract and all other contracts between the Buyer and CFTUK (whether or not the sums due under those contracts are immediately due and payable). Until then the Buyer shall:

11.2.1. hold the Goods as CFTUK's fiduciary agent and bailee, and shall keep them separate from all other goods and properly stored, protected and insured and identified as CFTUK's property but may resell or use the Goods in the ordinary course of its business;

11.2.2. (provided the Goods are still in existence and have not been resold), deliver up the Goods to CFTUK on demand

11.2.3. and, if the Buyer fails to do so immediately, CFTUK may enter any premises of the Buyer or any third party where the Goods are stored and repossess the Goods.

12. WARRANTIES AND LIABILITIES

12.1. CFTUK warrants that it holds unencumbered title to the Goods and will perform services with reasonable skill and care.

12.2. Subject to condition 12.3, CFTUK warrants that the Goods will correspond with their specification at the time of delivery and will be free from defects in material and workmanship for 12 months from delivery.

12.3. The above warranty does not apply to any defect:

12.3.1. arising from any drawing, design or specification supplied by the Buyer;

12.3.2. arising from fair wear and tear, improper use, storage or installation or maintenance, failure to follow CFTUK's instructions (whether oral or in writing), or alteration or repair of the Goods without CFTUK's approval;

12.3.3. which is not immediately notified in writing to CFTUK;

12.3.4. if any sum owing by the Buyer to CFTUK has not been paid;

12.3.5. in items not manufactured by CFTUK, when the Buyer shall only be entitled to the benefit of any such warranty as is given to CFTUK by the manufacturer.

12.4. CFTUK shall replace or repair free of charge the Goods (or the part in question) returned to CFTUK's factory carriage paid which do not meet the warranty in condition 12.2 or, at CFTUK's sole discretion, refund to the Buyer the price of the Goods (or a proportionate part of the price) but CFTUK shall have no further liability to the Buyer. The warranty on replacements or repairs shall be to the end of the original warranty period. Repairs and replacements will be delivered free within the UK and to the nearest port or airport c.i.f. outside the UK.

12.5. Subject as expressly provided in these Conditions, all warranties, conditions, representations or other terms implied by statute or common law are excluded to the fullest extent permitted by law.

12.6. The following provisions set out CFTUK's entire liability whether arising in contract, tort (including negligence), misrepresentation (other than fraudulent misrepresentation) or otherwise howsoever arising.

AND THE BUYER'S ATTENTION IS IN PARTICULAR DRAWN TO THE FOLLOWING PROVISIONS OF THIS CONDITION

12.7. To the extent the law does not permit such liability to be excluded:

12.7.1. CFTUK's liability to the Buyer for death or injury resulting from its negligence shall not be limited;

12.7.2. CFTUK accepts liability to the Buyer for damage to the tangible property of the Buyer resulting from the negligence of CFTUK not exceeding £1,000,000 for any one incident or series of incidents arising from a common cause;

12.7.3. Save as otherwise expressly provided, CFTUK's entire liability shall be limited to damages of an amount equal to the price due under the Contract.

12.8. Subject to condition 12.7.1 above, CFTUK shall not be liable for any increased costs, expenses, loss of profits, goodwill, business, contracts, revenues or anticipated savings or any type of special indirect or consequential loss (including loss or damage suffered by the Buyer as a result of a claim by a third party) even if such loss was reasonably foreseeable or CFTUK had been advised of the possibility of the Buyer incurring the same.

12.9. CFTUK shall not be liable to the Buyer or be deemed to be in breach of the Contract by reason of any delay in performing, or any failure to perform, any of CFTUK's obligations, if the delay or failure was due to any cause beyond CFTUK's reasonable control including (without limitation) flood, fire, accident, transportation delays, strikes, war or threat of war, sabotage, civil disturbance or governmental action, disruption of supplies or services.

12.10. Save as otherwise expressly provided, the Buyer shall indemnify CFTUK against any cost, claim, expense, loss or liability made by any person in connection with the Goods or their use.

13. INSOLVENCY AND BREACH

13.1. If the Buyer fails to make any payment when due or breaches any provision of the Contract; or CFTUK reasonably apprehends that the solvency of the Buyer may be in jeopardy CFTUK may cancel the Contract or suspend any further deliveries under the Contract without any liability to the Buyer, and if the Goods have been delivered but not paid for the price shall become immediately due and payable notwithstanding any previous agreement or arrangement to the contrary.

14. SAFETY, OPERATING AND MAINTENANCE INSTRUCTIONS

The Buyer's attention is directed to the instructions for use and cautionary notes supplied with the Goods, as well as other technical literature.

15. STANDARD OF COATING ATTAINED

The Buyer shall follow CFTUK's instructions on operation and maintenance. CFTUK accepts no responsibility for unsatisfactory results due to use of coating materials not recommended in writing by CFTUK or whose composition or quality when supplied is different from that tested by CFTUK when giving its recommendation.

16. GENERAL

16.1. CFTUK may assign its rights and obligations. The Buyer may not assign its rights and obligations.

16.2. Any notice shall be in writing addressed to the addressee at its registered office or principal place of business or such other address as may have been notified by the party giving the notice.

16.3. Any notice is deemed to have been received:

16.3.1. if delivered personally, at the time of delivery; or

16.3.2. if sent by commercial courier, at the time of signature of the courier's delivery receipt; or

16.3.3. in the case of pre-paid first class post or recorded delivery, 9.00 am on the second Business Day after posting; or

16.3.4. in the case of airmail, 9.00 am on the fifth Business Day after posting.

16.4. No delay or failure by CFTUK in enforcing or partially enforcing any provision of the Contract shall constitute a waiver of that provision or any other provision. No waiver by CFTUK shall be considered as a waiver of any subsequent breach of the same or any other provision. No waiver by CFTUK shall be effective unless in writing.

16.5. If any provision of these Conditions is held by any competent authority to be invalid or unenforceable in whole or in part the validity of the other provisions of these Conditions and the remainder of the provision in question shall not be affected.

16.6. These Conditions constitute the entire agreement between CFTUK and the Buyer concerning the supply of the Goods and replace and supersede any prior arrangement, understanding, warranty or representation (other than any fraudulent misrepresentation).

16.7. CFTUK's rights are cumulative and in addition to any rights available to it at common law.

16.8. The Contract shall be governed by the laws of England and Wales and, subject to clause, 16.9 the parties submit to the exclusive jurisdiction of the courts of England and Wales. For the avoidance of doubt, the United Nations Convention on the International Sale of Goods shall not apply to the Contract.

16.9. Nothing in these Conditions shall limit the right of CFTUK to take proceedings against the Buyer in any other court of competent jurisdiction, nor shall the taking of proceedings in any one or more jurisdiction preclude the taking of proceedings in any other jurisdiction, whether concurrently or not, to the extent permitted by the law of such other jurisdiction.

16.10. No term of this contract shall be enforceable under the Contracts (Rights of Third Parties) Act 1999 by a third party.

16.11 These Conditions are drafted in the English language. If these Conditions are translated into any other language, the English language text shall prevail.

16.12 Any notice given under or in connection with the Contract shall be in the English language. All other documents provided under or in connection with the Contract shall be in the English language.

A guide to the DSEAR and ATEX Directives

What is DSEAR and ATEX?

The EU Directives 2014/34/EU(ATEX) "Equipment for use in potentially explosive atmospheres" and the "Workplace directive" 1999/92/EC (ATEX 137) are the European directives, which ensure employers work practices and manufacturers of equipment used in potentially explosive atmospheres, are safe and do not create potential explosion hazards. In other words, its all about health and safety at work for workers who handle and work with flammable and dangerous materials, to ensure they are not at risk of an explosion from the equipment and work practices.

The ATEX directives are implemented into UK law by the regulations "Dangerous Substances and Explosive Atmospheres Regulations" known as DSEAR 2002 and "the Equipment and protective systems for use in potentially explosive atmospheres regulations" 1996. DSEAR became mandatory in July 2006. DSEAR is a legal Health and Safety requirement which is enforced by the HSE, local authorities and in part the fire service.

ATEX Compliance

As a manufacturer of equipment used in potentially explosive atmospheres, we comply with this directive by applying the CE mark along with the Explosion protection symbol (Ex) and other markings to show compliance of that product.

Each piece of equipment must be marked with information to enable the user to assess its suitability to be used in the environment it is intended to be used in. The equipment could be marked with the following;

- Name and address of Manufacturer
- The CE mark
- If the equipment has been certified by a Notified Body, their reference follows the CE mark
- Equipment model number/name/type
- Year of manufacture
- The Explosion protection Symbol (Ex)
- The equipment Group II and category 1, 2 or 3
- For Gas (G) e.g. Group 2, Cat 2 Gas

Workplace regulations DSEAR 2002

The ATEX 1999/92/EC workplace regulations are implemented in the UK through the DSEAR 2002 Regulations. The duties for employers and owners under DSEAR are;

- Carry out a risk assessment of work involving dangerous substances and eliminate or reduce any risks identified.
- Provide equipment and procedures for accidents and emergencies.
- Instruct and train employees.
- Areas where hazardous explosive atmospheres may occur are classified into zones and where necessary marked with a specified "EX" sign at their points of entry; (eg spray booths, mix rooms, paint stores etc).
- Provide equipment and protective systems which comply with ATEX Regulations appropriate for the Zone rating of the hazardous area.
- Document all the above in an Explosion Protection Document.

Typical Markings found on Hazardous Area Equipment

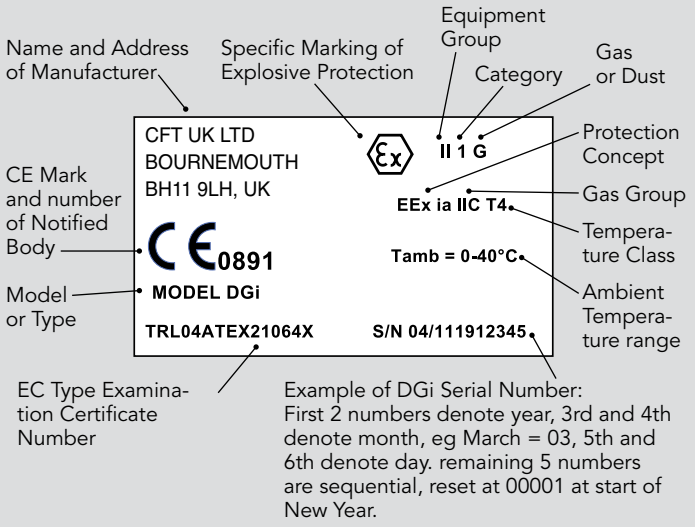

Typical Markings found on Sprayguns

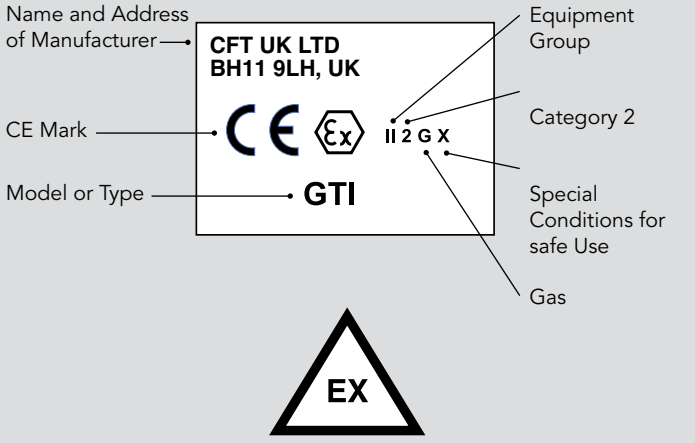

Avoidance of Hazards associated with Spraying flammable materials

The main hazard with spraying is electrostatic discharges and mechanically generated sparks. To avoid these ignition hazards, you should;

- Only use equipment CE marked to ATEX regulations. Most Carlisle Fluid Technologies UK Ltd Products are CE marked to ATEX eg Sprayguns, Digital Gauge, hoses. If in doubt, contact your distributor or Carlisle Fluid Technologies UK Ltd.
- The equipment must be installed and used in accordance with the instructions provided by the manufacturer(s).
- Ensure metallic parts of the equipment are earthed and bonded together (e.g. pressure feed tanks and pumps) to avoid potential differences between them. Metallic portable containers must be bonded and earthed. Check earth continuity at regular intervals. Keep earthing points clean.
- Use conductive air and fluid hoses to avoid static charging from air and fluid flows.
- Equip Operators with anti-static clothing and conductive footwear. Remove contaminated clothing if leaving the workplace into areas where ignitions hazards may occur e.g. smoking.
- Clean equipment with non-flammable liquids, or use safety cans with flame arrestors for use with flammable liquids.
- Removal of paint residues with scrapers made of plastic or non-sparking materials (steel scrapers can create sparks). Coat walls with strippable/ peelable coatings to avoid removal of residues by mechanical means.

More information can be found at the HSE DSEAR website: http://www.hse.gov.uk/fireandexplosion/dsear.htm



DEVILBISS®
AUTOMOTIVE REFINISHING

The brands you trust

DeVilbiss Automotive Refinishing is a Carlisle Fluid Technologies brand featuring products designed to deliver premium finishes for the professional automotive repair shop. DeVilbiss brand products include low-pressure manual and automatic spray guns and related accessories, including air filter reducing valves and regulators, operator breathing systems and hoses.

Let's start a conversation

We want to work together to help answer your application problems. To learn more about what we can offer, give us a call at or visit us at ***autorefinishdevilbiss.com***.

facebook.com/DeVilbissInternational

youtube.com/DevilbissEurope

instagram.com/devilbiss_refinish

CARLISLE FLUID TECHNOLOGIES

CarlisleFT.com

Carlisle Fluid Technologies – EMEAI
Tel: +44 1202 571111 | **Email:** marketing-eu@carlisleft.com
Ringwood Road, Dorset, Bournemouth BH11 9LH, United Kingdom

©2020 Carlisle Fluid Technologies, Inc. | *DeVilbiss is a* registered trademarks of Carlisle Fluid Technologies, Inc.
Models and specifications subject to change without notice. All rights reserved. | 19-375 | Form No. FCN-02-2020