SERVICE MANUAL
EN

GPG Conventional, HVLP or High Efficiency Gravity Spray Gun

II 2 G X/Ex h II Gb X

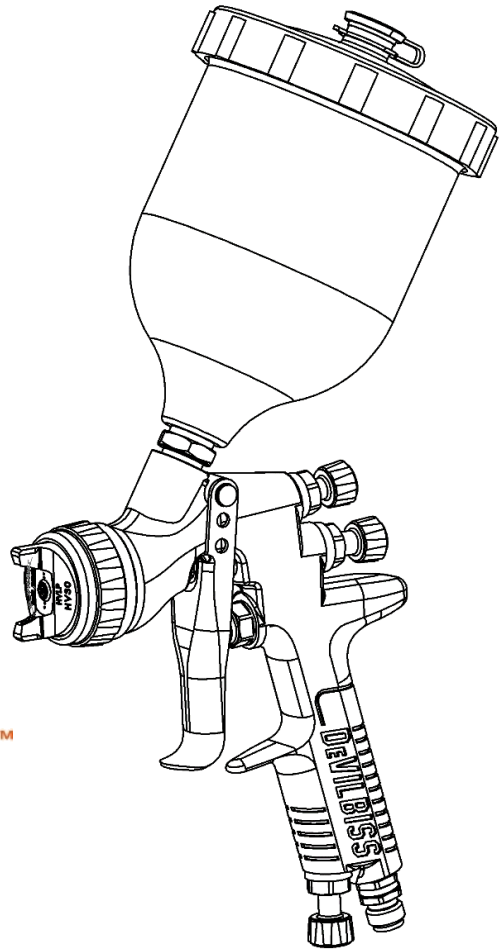

GPG™

IMPORTANT! DO NOT DESTROY

It is the Customer's responsibility to have all operators and service personnel read and understand this manual.

Contact your local Carlisle Fluid Technologies representative for additional copies of this manual.

READ ALL INSTRUCTIONS BEFORE OPERATING THIS PRODUCT.

FUNCTIONAL DESCRIPTION

The GPG spray gun is a professional quality spray gun designed to comply with all global legislations.

SPECIFICATIONS

AIR INLET PRESSURES	
P1 = Max. Static Air Input Pressure	12 bar [175 psi]
Gun Air Inlet Pressure with gun triggered	See Table 1 - Page 8
Vibration Level:	<2.5 m/s²
Sound Power Level:	Available On Request
Sound Pressure Level:	Available On Request

ENVIRONMENTAL	
Max. Ambient Operating Temperature	40°C Nominal [104°F]

MATERIALS OF CONSTRUCTION	
Gun Body, Air Cap Retaining Ring, Knobs	Anodised Aluminum
Fluid Nozzle, Fluid Needle and Trigger Stud	Stainless Steel
Air Cap Material	Electroless Nickel Plated Brass
Springs, Clips, Screws	Stainless Steel
Seals and O-Rings	Solvent Resistant
Trigger	Chrome Plated Steel
Retaining Ring, Sprayhead, Adjusting Knobs, Air Valve Cage, Sleeve	Chrome Plated Brass
Air Valve Assembly	Stainless Steel, HDPE

CONNECTIONS	
P1 = Air Inlet Size	1/4" Universal
P2 = Fluid Inlet Size	3/8" BSP

WEIGHT	
GUN ONLY	500g [17.6 oz]

DIMENSIONS	
L x H x W mm [inches]	187 x 332 x 108 [7.4 x 13.1 x 0.1 in]

Product Description / Object of Declaration:	**PROLite G, PROLite P/S, PROLite-S, GPG & FLG**
This Product is designed for use with:	Solvent and waterborne materials
Suitable for use in hazardous area:	Zone 1 / Zone 2
Protection Level:	II 2 G X/Ex h II Gb X
Notified body details and role:	Element Materials Technology (0891) Lodging of Technical file
This Declaration of conformity / incorporation is issued under the sole responsiblity of the manufacturer:	Carlisle Fluid Technologies UK Ltd, Ringwood Road, Bournemouth, BH11 9LH. UK

EU Declaration of Conformity

The object of the declaration described above is in conformity with the relevant Union harmonisation legislation:

ATEX Directive 2014/34/EU
Machinery Directive 2006/42/EC
By complying with the following statutory documents and harmonised standards:
EN 1127-1:2011 Explosive atmospheres - Explosion prevention - Basic concepts
BS EN 1953:2013 Atomizing and spraying equipment for coating materials - Safety requirements
EN ISO 12100:2010 Safety of Machinery - General Principles for Design
EN ISO 80079-36:2016 Explosive Atmospheres- Part 36:Non Electrical equipment for explosive atmospheres- Basic methods and requirements.
EN ISO 80079-37:2016 Explosive Atmospheres- Part 37: Non Electrical equipment for explosive atmospheres - protection by methods "c", "b" and "k".
HVLP and High Efficiency products comply with the requirements of PG6 from the EPA guidelines and offer greater than 65% transfer efficiency.
High volume, low pressure HVLP spray guns are designed to reduce overspray and provide maximum transfer efficiency by limiting air cap pressure to 0.69 bar (10 psi)with the trigger completely pulled (complies with rules issued by SCAQMD and other authorities). For compliance the inlet pressure must not exceed 26 psi when used with the GPG2 cap or 21 psi when used with the PR30 air cap to maintain . Air cap test kits 905362 for the GPG2 cap and 704173 for the PR30 cap are available to set the exact cap pressure.
For North America only, the 7E7 air cap is only approved for the application of color coatings and clearcoats in regulated areas. For compliance in regulated areas, this spray gun must be used with a DeVilbiss spray gun mounted air adjusting valve (HAV-512, HAV-555, or DIGIPRO-504-PSI) which is in good working order. For compliance the inlet pressure must not exceed 22 psi when used with the 7E7 air cap. Item 50 must also be removed for compliance. This gun can also be used in unregulated areas with the 7E7 air cap while using any coating.

Providing all conditions of safe use / installation stated within the product manuals have been complied with and also installed in accordance with any applicable local codes of practice.

Signed for and on behalf of Carlisle Fluid Technologies UK Ltd:	M.Munoz 15/5/20	Vice President of Engineering

In this part sheet, the words WARNING, CAUTION and NOTE are used to emphasise important safety information as follows:

⚠ WARNING	⚠ CAUTION	NOTE
Hazards or unsafe practices which could result in severe personal injury, death or substantial property damage.	Hazards or unsafe practices which could result in minor personal injury, product or property damage.	Important installation, operation or maintenance information.

⚠ WARNING

Read the following warnings before using this equipment.

SOLVENTS AND COATING MATERIALS. Can be highly flammable or combustible when sprayed. Always refer to the coating supplier's instructions and safety sheets before using this equipment.

READ THE MANUAL. Before operating finishing equipment, read and understand all safety, operation and maintenance information provided in the operation manual. Users must comply with all local and national codes of practice and insurance company requirements governing ventilation, fire precautions, operation and house-keeping of working areas.

FIRE AND EXPLOSION HAZARD. Never use 1,1,1-Trichloroethane, Methylene Chloride, other Halogenated Hydrocarbon solvents or fluids containing such solvents in equipment with aluminium wetted parts. Such use could result in a serious chemical reaction, with the posibility of explosion. Consult your fluid suppliers to ensure that the fluids being used are compatible with aluminium parts.

STATIC CHARGE. Fluid may develop a static charge that must be dissipated through proper grounding of the equipment, objects to be sprayed and all other electrically conductive objects in the dispensing area. Improper grounding or sparks can cause a hazardous condition and result in fire, explosion or electric shock and other serious injury.

TOXIC VAPOURS. When sprayed, certain materials may be poisonous, create irritation, or are otherwise harmful to health. Always read all labels, safety sheets and follow any recommendations for the material before spraying. If in doubt contact your material supplier.

LOCK OUT / TAG-OUT. Failure to de-energise, disconnect, lock out and tag-out all power sources before performing equipment maintenance could cause serious injury or death.

NOISE LEVELS. The A-weighted sound level of pumping and spray equipment may exceed 85 dB(A) depending on equipment settings. Actual noise levels are available on request. It is recommended that ear protection is worn at all times while equipment is in use.

HIGH PRESSURE CONSIDERATION. High pressure can cause serious injury. Relieve all pressure before servicing. Spray from the gun, hose leaks or ruptured components can inject fluid into your body and cause extremely serious injury.

INSPECT THE EQUIPMENT DAILY. Inspect the equipment for worn or broken parts on a daily basis. Do not operate the equipment if you are uncertain about its condition.

EQUIPMENT MISUSE HAZARD. Equipment misuse can cause the equipment to rupture, malfunction or start unexpectedly and result in serious injury.

GLOVES. Must be worn when spraying or cleaning the equipment.

WEAR SAFETY GLASSES. Failure to wear safety glasses with side shields could result in serious eye injury or blindness.

WEAR RESPIRATOR. The use of respiratory protective equipment is recommended at all times. The type of equipment must be compatible with the material being sprayed.

NEVER MODIFY THE EQUIPMENT. Do not modify the equipment unless the manufacturer provides written approval.

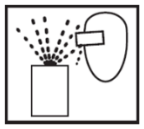

PROJECTILE HAZARD. You may be injured by venting liquids or gases that are released under pressure, or flying debris.

PRESSURE RELIEF PROCEDURE. Always follow the pressure relief procedure in the equipment instruction manual.

KNOW WHERE AND HOW TO SHUT OFF THE EQUIPMENT IN CASE OF AN EMERGENCY.

OPERATOR TRAINING. All personnel must be trained before operating finishing equipment.

IT IS THE RESPONSIBILITY OF THE EMPLOYER TO PROVIDE THIS INFORMATION TO THE OPERATOR OF THE EQUIPMENT.

EXPLODED VIEW

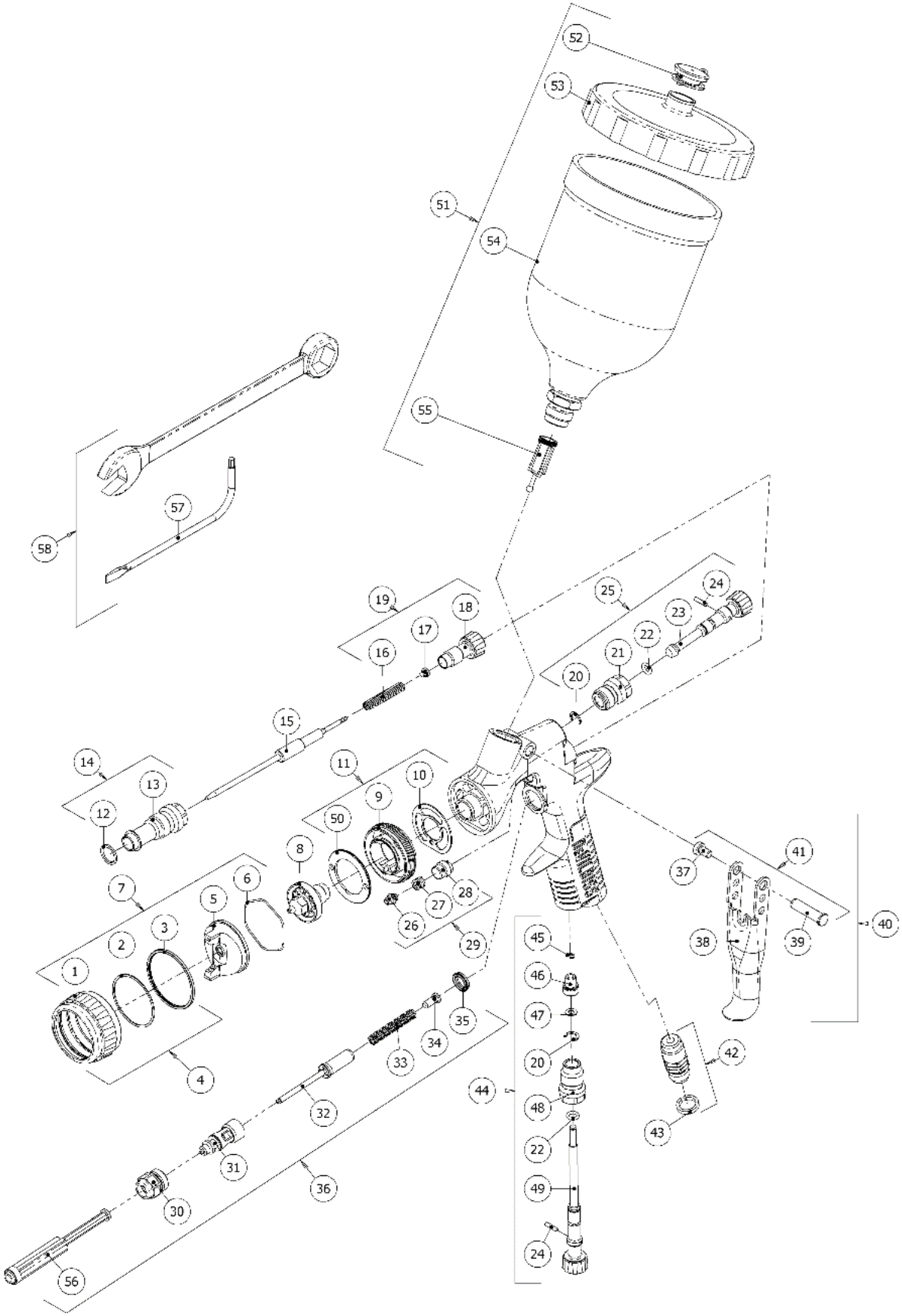

PARTS LIST

REF.		PART No.	DESCRIPTION	QTY.
1		-	RETAINING RING	1
2		-	SLIP RING	1
3		-	RETAINING RING SEAL	1
4		905329	RETAINING RING SUB ASSEMBLY	1
5		-	AIR CAP	1
6		905208	SPRING CLIP (KIT OF 5)	1
7		SEE TABLE 1	AIR CAP & RETAINING RING	1
8		SEE TABLE 3	FLUID NOZZLE	1
9		-	SPRAYHEAD	1
10	*	905287	GASKET (KIT OF 2)	1
11		905286	SPRAY HEAD KIT	1
12	*	-	BODY BUSHING SEAL	1
13		-	BODY BUSHING	1
14		905300	BODY BUSHING & SEAL	1
15		SEE TABLE 3	FLUID NEEDLE	1
16	*	-	NEEDLE SPRING	1
17	*	-	SPRING PAD	1
18		-	FLUID ADJUSTING KNOB	1
19		905327	FLUID ADJUSTING KNOB,SPRING & PAD KIT	1
20	*	-	CIRCLIP	2
21		-	VALVE BODY	1
22	*	-	O RING	2
23		-	SPREADER VALVE ADJUSTING KNOB	1
24	*	-	SPREADER VALVE PIN	2
25		905328	SPREADER VALVE ASSEMBLY	1
26		-	NEEDLE PACKING	1
27		-	PACKING SPRING	1
28		-	PACKING NUT	1
29	*	905294	PACKING, SPRING & PACKING NUT KIT	1
30		-	AIR VALVE BODY	1
31		-	AIR VALVE CAGE	1
32		-	AIR VALVE POPPET	1
33		-	AIR VALVE SPRING	1
34		-	AIR VALVE SPRING PAD	1
35		905290	AIR VALVE SEAL	1
36		905293	AIR VALVE ASSEMBLY	1

PARTS LIST (Continued)

REF.	PART No.	DESCRIPTION	QTY.
37 *	-	TRIGGER SCREW	1
38	-	TRIGGER	1
39 *	-	TRIGGER STUD	1
40	905288	TRIGGER, STUD & SCREW KIT	1
41	905295	STUD AND SCREW KIT (KIT OF 5)	1
42	905305	AIR INLET	1
43	905289	COLOUR ID RING KIT (4 COLOURS)	1
44	905277	AIRFLOW VALVE	1
45	905200	CIRCLIP (KIT OF 5)	1
46	-	VALVE HEAD	1
47	-	WASHER	1
48	-	VALVE BODY	1
49	-	VALVE ADJUSTING KNOB	1
50	905297	BAFFLE PLATE	1
51	905204	GRAVITY CUP KIT	1
52	905202	DRIP CHECK LID (KIT OF 5)	1
53	905203	GRAVITY CUP LID	1
54	-	GRAVITY CUP	1
55	905207	FILTER (KIT OF 5)	1
56	-	AIR VALVE SERVICE TOOL	1
57	905307	TORX DRIVER (KIT OF 2)	1
58	905296	TOOL KIT	1

PARTS LIST (Continued)

SERVICE PARTS

905279	SPRAY GUN REPAIR KIT (INCLUDES ITEMS MARKED *)
905206	SEAL AND PIN KIT, KIT OF 5 (ITEMS 32, 34 & 36)

GRAVITY CUP

51	905204	PLASTIC
	702576	ALUMINUM

WARNING

The spray gun must be earthed to dissipate any electrostatic charges which may be created by fluid or air flows. This can be achieved through the spray gun mounting, or conductive air/fluid hoses. Electrical bond from the spray gun to earth should be checked and a resistance of less than 10^6 Ohms is required.

GPG PART SELECTION GUIDE

TABLE 1 - AIR CAP PERFORMANCE GUIDE

Air Cap & Type		Part Number	Air Consumption (l/min)	Recommended Air Inlet Pressure	Typical Fan Pattern Size**
C30	Conventional	905227	305 [10.8 cfm]	2.0 Bar [29 psi]	240-265mm
C86	Conventional	905228	300 [10.6 cfm]	2.0 Bar [29 psi]	275-290mm
7E7	High Efficiency	905226	305 [10.8 cfm]	1.5 Bar [22 psi]	240-265mm
GPG1	High Efficiency	905229	270 [9.5 cfm]	2.0 Bar [29 psi]	270-290mm
GPG2*	HVLP	905230	450 [15.9 cfm]	1.8 Bar [26 psi]	290-310mm
PR10	High Efficiency	905209	340 [12.0 cfm]	2.0 Bar [29 psi]	265-305mm
PR30*	HVLP	905210	450 [16.0 cfm]	1.4 Bar [21 psi]	280-330mm

** Fan pattern size @ 200mm [8"] distance.

High volume, low pressure HVLP spray guns are designed to reduce overspray and provide maximum transfer efficiency by limiting air cap pressure to 0.69 bar (10 psi)with the trigger completely pulled (complies with rules issued by SCAQMD and other authorities). For compliance the inlet pressure must not exceed 26 psi when used with the GPG2 cap or 21 psi when used with the PR30 air cap to maintain . Air cap test kits 905362 for the GPG2 cap and 704173 for the PR30 cap are available to set the exact cap pressure.

For North America only, the 7E7 air cap is only approved for the application of color coatings and clearcoats in regulated areas. For compliance in regulated areas, this spray gun must be used with a DeVilbiss spray gun mounted air adjusting valve (HAV-512, HAV-555, or DIGIPRO-504-PSI) which is in good working order. For compliance the inlet pressure must not exceed 22 psi when used with the 7E7 air cap. Item 50 must also be removed for compliance. This gun can also be used in unregulated areas with the 7E7 air cap while using any coating.

* Compliant in North America. For confirmation of approvals, please contact Customer Services.

TABLE 2 - FLUID NOZZLES & NEEDLES

Conventional				
Fluid Nozzle			Needle	
Part Number	Fluid Nozzle Size	Marking	Part Number	Marking
905223	1.4	PROC-245-14	905267	PRO-306-12-14
905224	1.6	PROC-245-16	905268	PRO-306-16-18
905225	1.8	PROC-245-18		

High Efficiency / HVLP				
Fluid Nozzle			Needle	
Part Number	Fluid Nozzle Size	Marking	Part Number	Marking
905213	1.4	PRIPRO-220-14	905218	PRIPRO-310
905214	1.6	PRIPRO-220-16		
905215	1.8	PRIPRO-220-18		
905216	2.0	PRIPRO-220-20		
905217	2.5	PRIPRO-220-25		
905211	UV1	PRIPRO-219-UV1	905219	PRIPRO-311
905212	UV2	PRIPRO-219-UV2		
905259	1.2	PRO-205-12	905267	PRO-306-12-14
905260	1.3	PRO-205-13		
905261	1.4	PRO-205-14		
905262	1.5	PRO-205-15		
905263	1.6	PRO-205-16	905268	PRO-306-16-18
905264	1.8	PRO-205-18		
905265	2.0	PRO-205-20	905269	PRO-306-20-22
905331	2.2	PRO-205-22		

⚠ **CAUTION**

IMPORTANT: This spraygun is suitable for use with both waterborne and solventborne paints & coatings.

- The gun is not designed for use with highly corrosive and/or abrasive materials.
- To avoid premature degradation of parts, DeVilbiss recommends the gun is washed in neutral cleaning solution (pH 6 to 8).
- The gun is not designed to be cleaned within an ultrasonic bath.

If there is any doubt regarding the suitability of a specific material, contact your DeVilbiss Distributor or DeVilbiss direct.

START-UP SEQUENCE

1. Connect the gun to a clean, moisture and oil free air supply using a conductive hose of at least 8mm I.D.

2. Mix paint or coating to Manufacturer's instructions and strain material.

3. Turn fluid adjusting knob (18) clockwise to prevent fluid needle movement.

4. Turn spreader valve adjusting knob (23) counter clockwise to fully open.

5. Adjust inlet air pressure if required.

6. Turn fluid adjusting knob counter clockwise until first thread shows.

7. Test spray. If the finish is too dry, reduce airflow by reducing air inlet pressure.

8. If finish is too wet, reduce fluid flow by turning fluid adjusting knob (18) clockwise. If atomization is too coarse, increase air inlet pressure. If too fine, reduce inlet pressure.

9. The pattern size can be reduced by turning spreader valve knob (23) clockwise.

10. Hold gun perpendicular to surface being sprayed. Arcing or tilting may result in uneven coating.

11. The recommended spray distance is 150-200mm.[6-8"]

12. Spray edges first. Overlap each stroke a minimum of 75%. Move gun at a constant speed.

13. Always turn off air supply and relieve pressure when gun is not in use.

NOTE
Depending on hose length, larger I.D. hose may be required. Install an air gauge at the gun handle. When gun is triggered on, adjust regulated pressure as required. Do not use more pressure than is necesarry to atomize the paint or coating being applied. Excess pressure will create additional overspray and reduce transfer efficiency.

NOTE
If quick connect couplings are required, use only high flow quick connects. Other types will not flow enough air for correct gun operation.

SPRAY GUN MAINTENANCE & CLEANING

To clean air cap and fluid nozzle, brush exterior with a stiff bristle brush. If necesarry to clean cap holes, use a broom straw or toothpick if possible. If a wire or hard instrument is used, extreme care must be taken to prevent scratching or burring of the holes which will cause a distorted spray pattern.

To clean fluid passages, remove excess material, then flush with gun wash solution. Wipe the gun exterior with a dampened cloth. Never completely immerse in any solvent or cleaning solutions as this is detrimental to the lubricants and life of the spray gun.

SPRAY GUN DISASSEMBLY / ASSEMBLY

KEY	
#	Order for disassembly *(reverse for assembly)*

DISASSEMBLY NOZZLE & NEEDLE

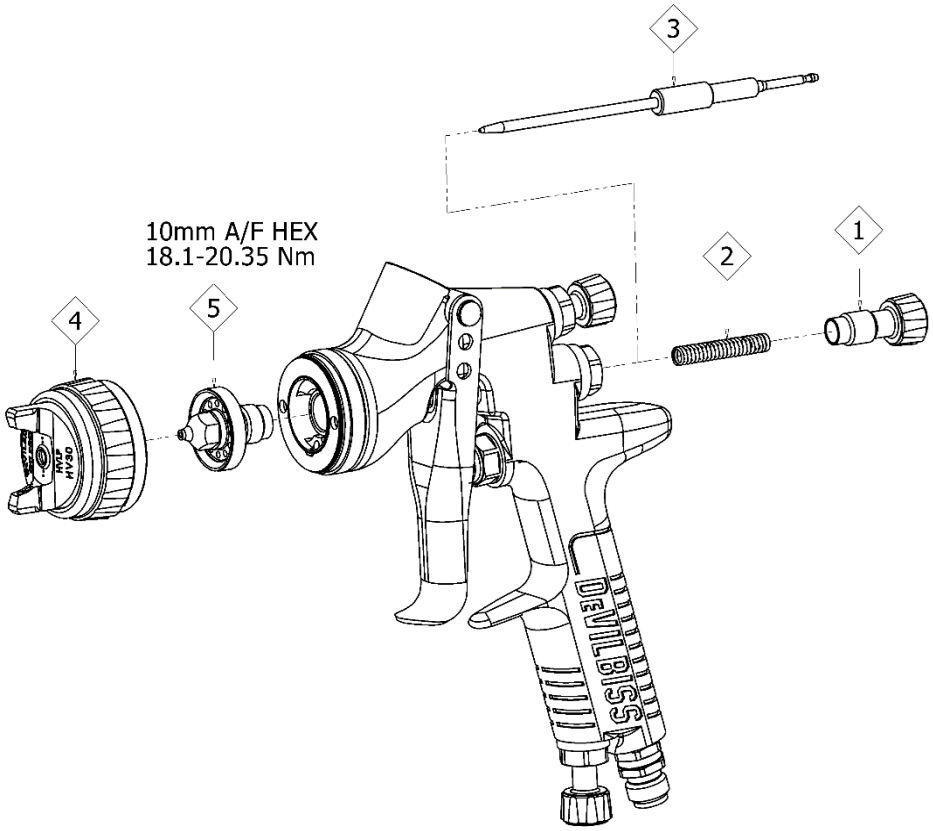

NOTE
When replacing the fluid nozzle or fluid needle, replace nozzle, needle and fluid packing at the same time. Using worn parts can cause fluid leakage. Do not overtighten.

NOTE
When removing air cap from retaining ring, do not remove slip ring or retaining ring seal from retaining ring. Damage to the parts may occur. The slip ring and retaining ring seal are not available as replacement parts. Simply wipe parts clean and reassemble with new or clean air cap.

DISASSEMBLY TRIGGER
DISASSEMBLY AIR VALVE

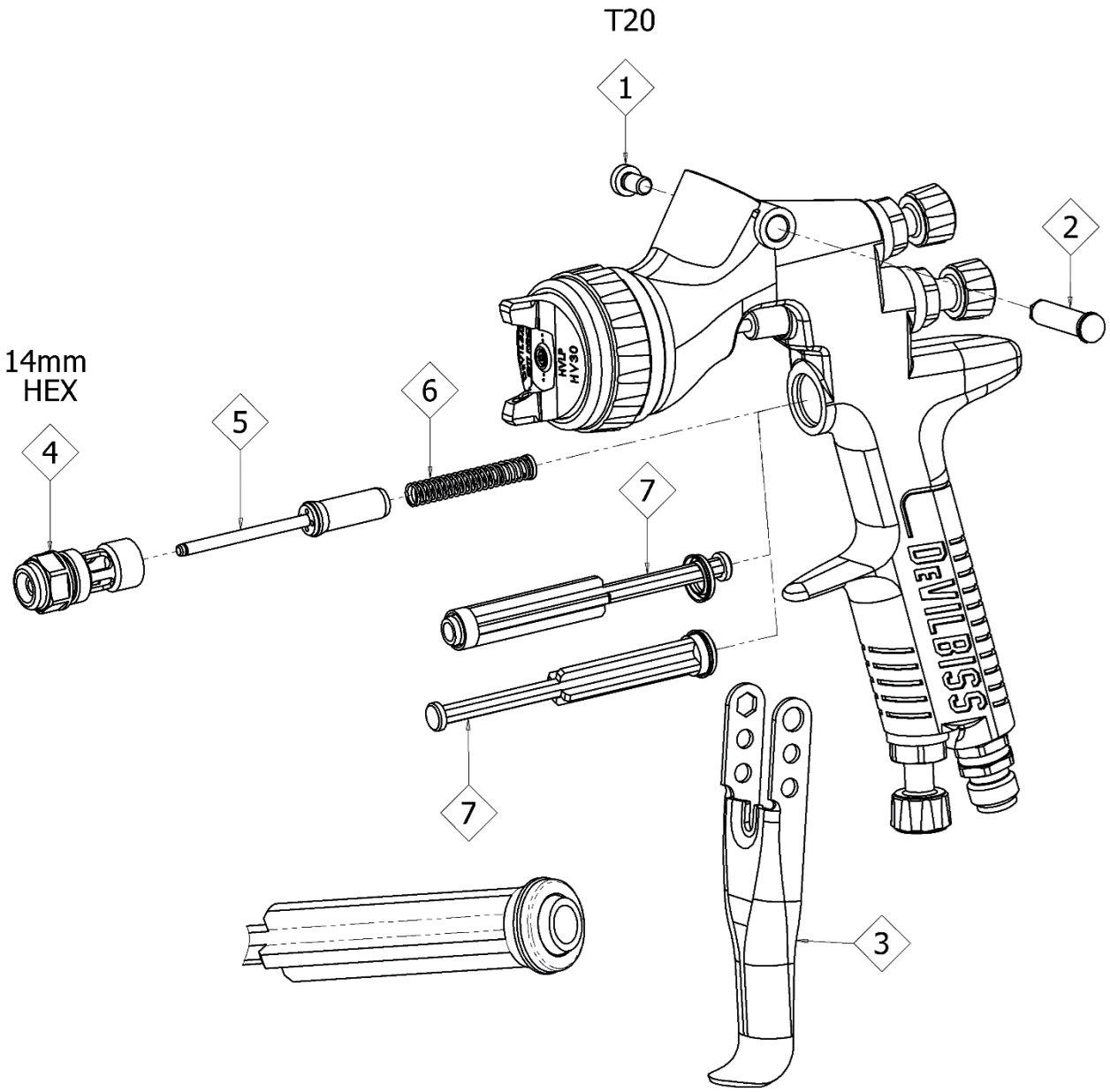

SPREADER VALVE REPLACEMENT

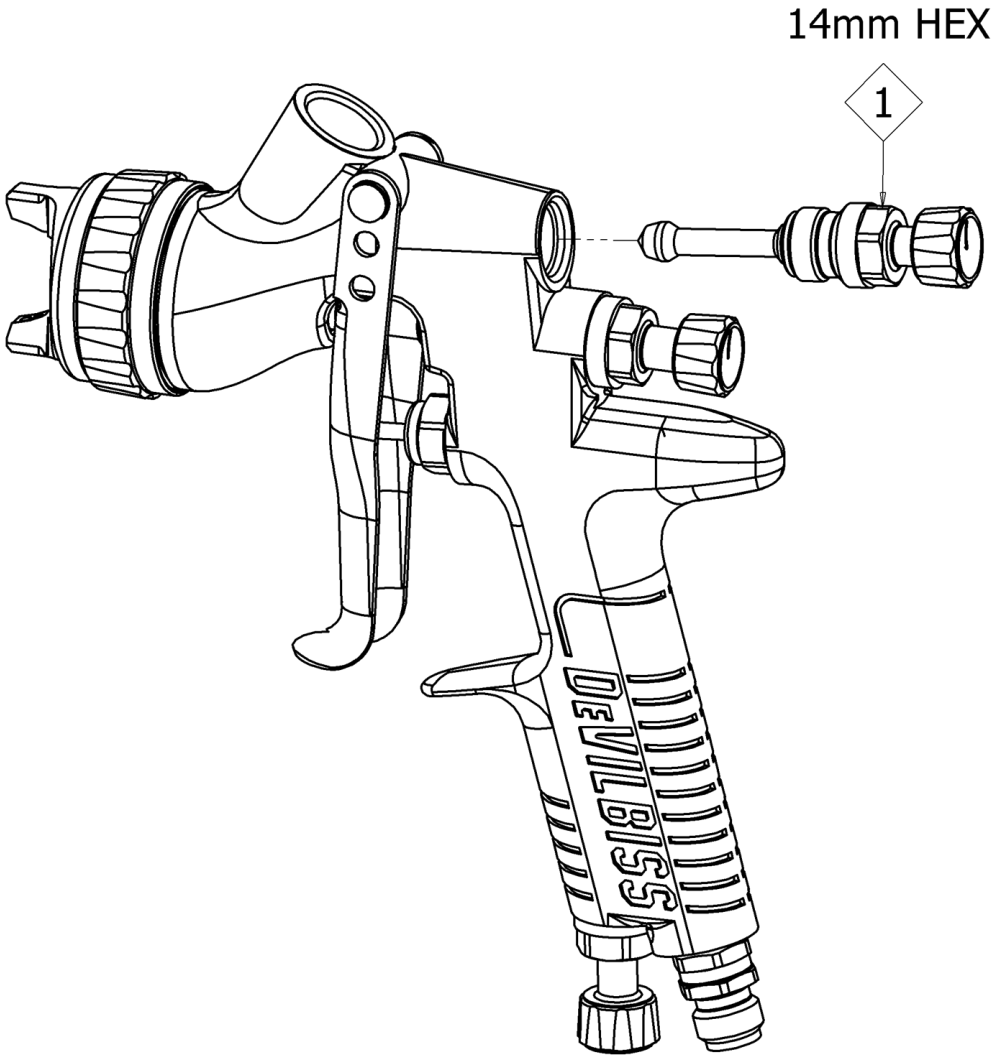

DISASSEMBLY PACKING

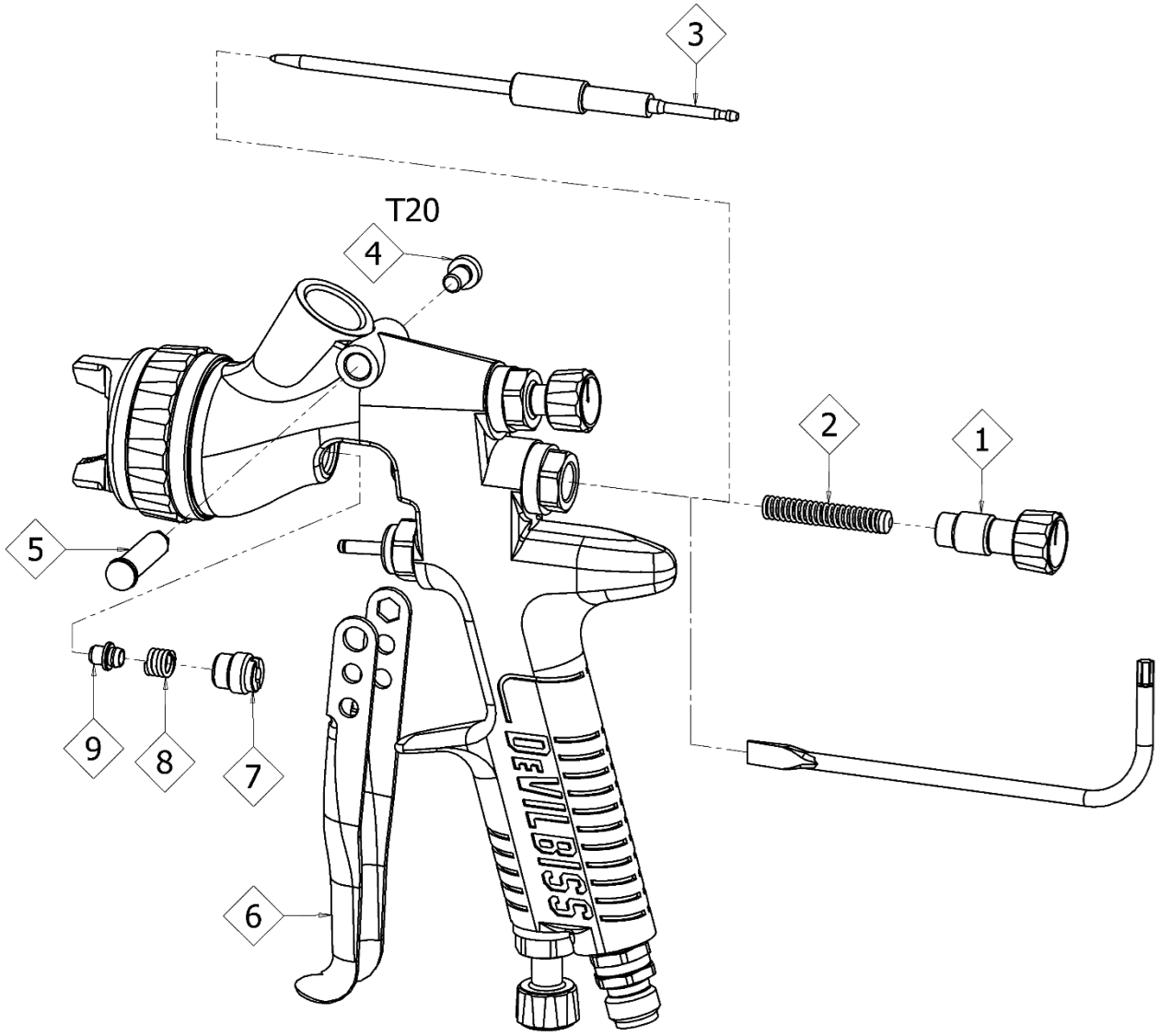

TROUBLESHOOTING MECHANICAL PERFORMANCE

GENERAL FAULTS	CAUSE	CORRECTION
Will not spray.	No air pressure at gun.	Check air supply and air line.
	Fluid needle adjustment knob not open enough.	Open fluid needle adjustment knob.
Gun spits paint when triggering on and off.	Incorrect needle fitted to gun.	Check fluid nozzle/needle selection chart and fit correct item.
	Excessive needle wear.	Replace with new needle.
	Excessive fluid nozzle wear.	Replace with new fluid nozzle.
Gun spits paint when triggering on due to paint build-up inside air cap between spraying operations.	Fluid nozzle not fitted correctly in gun head.	Tighten.
	Fluid nozzle/needle leakage.	Check for damage or blockage.
Paint build-up on fluid tip.	Fluid nozzle not fitted correctly in gun head.	Tighten.
	Fluid nozzle/needle leakage.	Check for damage or blockage.
Paint build-up on air cap.	Damaged air cap holes.	Replace with new air cap.
	Gradual build-up of bounce-back on gun head.	Thoroughly clean.
Unable to get round spray	Fluid nozzle or sprayhead incorrectly fitted.	Remove, check components for damage and refit correctly.

When removing air cap from retaining ring, do not remove the ring seat from the retaining ring. Damage to the parts may occur. Simply wipe parts clean and reassemble with new or clean air cap.

FLUID FAULTS	CAUSE	CORRECTION
Slow fluid leak from fluid nozzle and needle seat.	Fluid nozzle internal seat scored damaged or worn.	Replace.
	Fluid needle external profile damaged or worn.	Replace.
	Contamination on needle or tip mating surfaces preventing good seal.	Thoroughly clean.
	Incorrect fluid nozzle for fluid needle fitted to gun.	Check nozzle/needle selection chart and fit correct item.
	Sluggish needle.	Lubricate packing.
	Tight packing nut.	Adjust.
Major fluid leak or fluid jetting from fluid nozzle and needle seat.	Contamination on needle or tip mating surfaces preventing good seal.	Remove nozzle and needle and thoroughly clean.
	Incorrect fluid nozzle for fluid needle fitted to gun.	Check nozzle/needle selection chart and fit correct item.
Slow fluid leak from needle packing.	Fluid needle packing worn or loose.	Tighten or replace as necessary.

AIR FAULTS	CAUSE	CORRECTION
Small air leak from air cap when gun is not triggered.	Air Valve Stem contaminated and not correctly seating.	Remove Air Valve Stem and thoroughly clean valve shaft and seating surfaces.
	Air Valve Stem seal damaged or missing.	Replace.

TROUBLESHOOTING SPRAY PERFORMANCE

CONDITION	CAUSE	CORRECTION
Heavy top or bottom pattern. 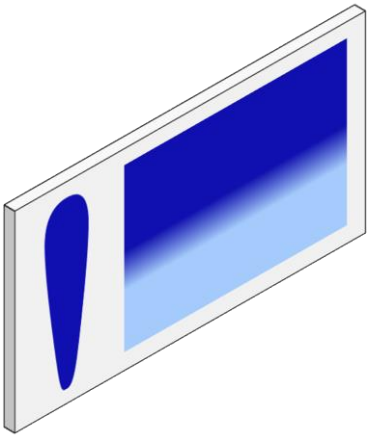	Paint or coating build-up on air cap, plugged horn holes, centre holes or jets.	Soak cap or nozzle in suitable solvent and thoroughly clean.
	Paint or coating build-up on fluid nozzle exterior or partially plugged fluid tip.	Replace fluid nozzle or air cap if necessary.
	Fluid nozzle or cap dirty or damaged.	Replace fluid nozzle or air cap if necessary.
Heavy right or left side pattern. 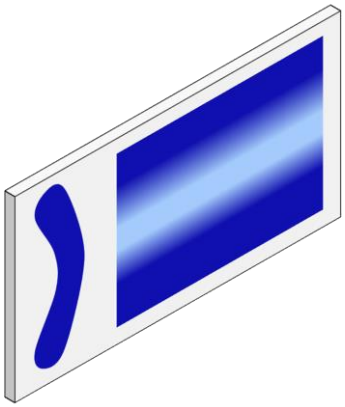	Left or right side horn holes plugged.	Soak cap or nozzle in suitable solvent and thoroughly clean.
	Dirt or damage on left or right side of fluid nozzle exterior.	Replace fluid nozzle or air cap if necessary.
Remedies for the top-heavy, bottom-heavy, right-heavy and left-heavy patterns.		
Determine if the obstruction is on the air cap or the fluid nozzle. Do this by making a test spray pattern. Then, rotate the cap one-half turn and spray another pattern. If the defect is inverted, obstruction is on the air cap. Clean the air cap as previously instructed. Also check for dried paint just inside the cap centre hole opening, remove by washing with solvent.		
If the defect is not inverted, it is on the fluid nozzle. Clean nozzle. If problem persists, renew nozzle.		

Heavy centre pattern. 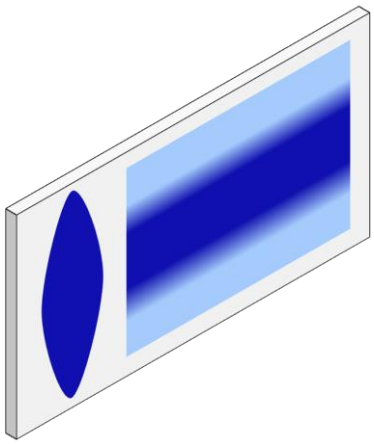	Pattern adjustment valve set too low.	Turn out counter clockwise to achieve correct pattern.
	Too much paint or coating.	Reduce fluid flow by turning fluid needle adjusting screw clockwise. Reduce fluid pressure.
	Paint or coating too thick.	Thin to correct consistency.
	Atomizing air pressure too low.	Increase air pressure.
Intermittent or 'fluttering' spray fan. 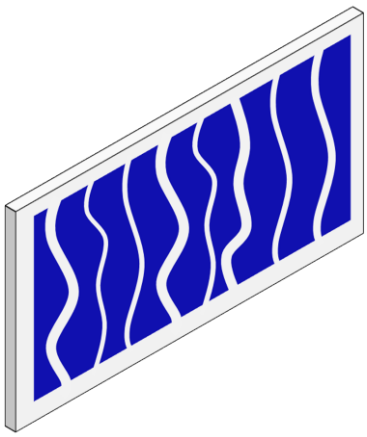	Loose fluid nozzle.	Tighten.
	Fluid nozzle not seated correctly in gun head.	Remove fluid nozzle, clean components, check cone seating on tip and gun for damage or contamination.
	Partially obstructed fluid passage or hose.	Clean or replace.
Split spray pattern 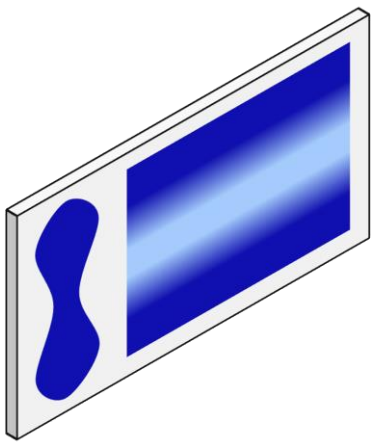	Not enough paint or coating flow.	Increase fluid flow by changing fluid nozzle size, opening needle control knob or increase fluid pressure on pressure feed container.
	Too high horn pressure.	Reduce air pressure by rotating pattern control valve clockwise.
	Too much air for fluid quanitity used.	Reduce input air pressure.

Ball end heavy pattern. 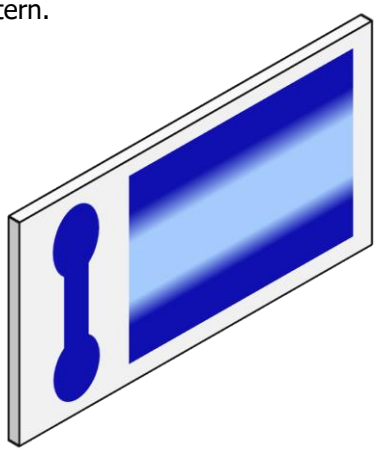	Too much fluid flow.	Change fluid nozzle for smaller size or change air cap for different specification air cap.
Excessive bounce-back.	Too much atomization air pressure.	Reduce air pressure.
	Gun too far from surface.	Check distance (normally 150-200mm [6-8"]).
Runs and sags.	Too much fluid flow.	Adjust gun or reduce fluid pressure.
	Paint or coating too thin.	Mix properly or apply light coats/reduce fluid flow.
	Gun tilted at an angle.	Mount gun at right angle to work.
Thin, sandy coarse finish drying before it flows out.	Gun too far from surface.	Check distance.
	Too much air pressure.	Reduce air pressure and check spray pattern.
	Fluid flow too low.	Increase fluid flow by changing fluid nozzle size, supply pressure or turning needle control knob counter clockwise.

DIMENSIONS

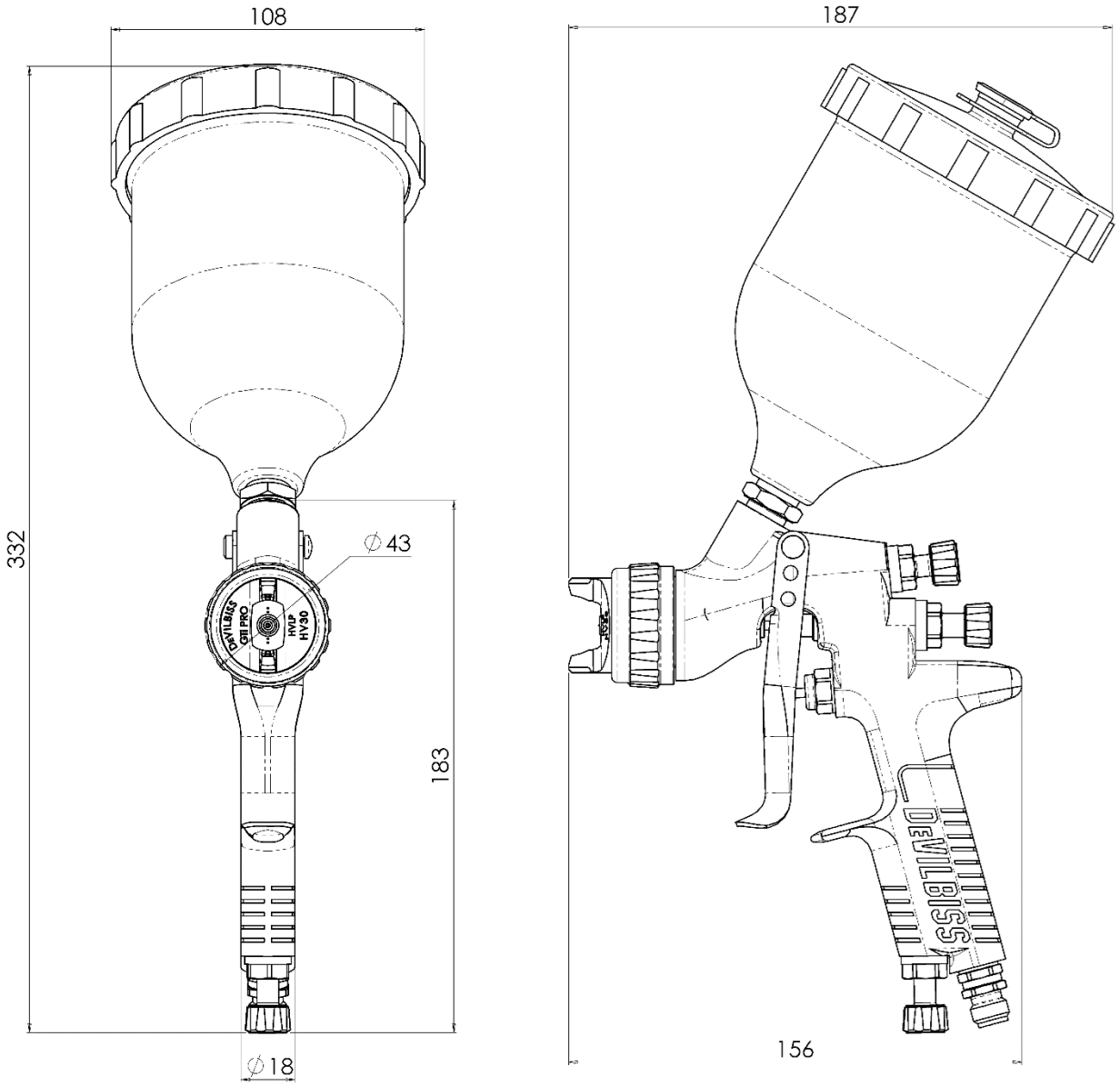

NOTES

WARRANTY POLICY

This product is covered by Carlisle Fluid Technologies' materials and workmanship limited warranty. The use of any parts or accessories, from a source other than Carlisle Fluid Technologies, will void all warranties. Failure to reasonably follow any maintenance guidance provided, may invalidate any warranty.

For specific warranty information please contact Carlisle Fluid Technologies.

Carlisle Fluid Technologies is a global leader in innovative finishing technologies.
Carlisle Fluid Technologies reserves the right to modify equipment specifications without prior notice.

DeVilbiss®, Ransburg®, MS®, BGK®, and Binks® are registered trademarks of Carlisle Fluid Technologies, Inc.
© 2020 Carlisle Fluid Technologies,Inc.
All rights reserved.

For technical assistance or to locate an authorised distributor, contact one of our international sales and customer support locations below.

Region	Industrial / Automotive	Automotive Refinishing
Americas	Tel: 1-888-992-4657 Fax: 1-888-246-5732	Tel: 1-800-445-3988 Fax: 1-800-445-6643
Europe, Africa, Middle East, India	Tel: +44 (0)1202 571 111 Fax: +44 (0)1202 573 488	
China	Tel: +8621-3373 0108 Fax: +8621-3373 0308	
Japan	Tel: +81 45 785 6421 Fax: +81 45 785 6517	
Australia	Tel: +61 (0) 2 8525 7555 Fax: +61 (0) 2 8525 7575	

For the latest information about our products, visit www.carlisleft.com

CARLISLE FLUID TECHNOLOGIES

SOLUTIONS FOR YOUR WORLD