DEVILBISS

EN

SB-E-2-971 ISS.06

CE Ex II 2 G X

ADVANCE HD range of HVLP and TRANSTECH® Suction and Pressure feed Spray Guns



Table of Contents

Topic	Page
EC Declaration of Conformity	3
Part Numbers	3
Operational Description	3
Kit contents	4
Construction Features	4
Materials of Construction	4
Specifications & Technical Data	4
Safety Precautions	5
Parts List	6
Exploded parts View	7
Installation, Operation, Preventive Maintenance & Cleaning	8
Parts Replacement/Maintenance	9
A. Servicing Air Valve	9
B. Replacing Air Valve	10
C. Needle Packing, Fluid Insert, Spreader Valve Assembly	11
D. Spray Head Seal	12
E. Fluid Inlet Seal and Suction Cup maintenance	13
F. Chart 1 – Air Caps, Chart 2 – Fluid Nozzles & Fluid Needles	14
Troubleshooting Possible Problems in Operation	15
Accessories	17
Warranty	17

© 2013 Finishing Brands UK Ltd.

EC Declaration of Conformity

We, Finishing Brands UK Limited, Ringwood Rd, Bournemouth, Dorset, BH11 9LH, UK, as the manufacturer of the Spray gun model **ADVANCE HD** declare, under our sole responsibility, that the equipment to which this document relates is in conformity with the following standards or other normative documents:

BS EN 292-1 PARTS 1 & 2: 1991, BS EN 1953: 1999; and thereby conform to the protection requirements of Council Directive 98/37/EEC relating to Machinery Safety Directive, and;

EN 13463-1:2001, council Directive 94/9/EC relating to Equipment and Protective Systems intended for use in Potentially Explosive Atmospheres protection level II 2 G X.
This product also complies with the requirements of the EPA guidelines, PG6/34. Transfer efficiency certificates are available on request.



D. Smith, General Manager
18th January 2013

Finishing Brands UK Limited reserves the right to modify equipment specification without prior notice.

Part Numbers

The ordering code for the **Advance HD** Spray gun is;

e.g. ADV-S510-13 where;

S	=	Suction or P for pressure
510	=	510 Aircap
13	=	1.3 Nozzle

See chart 1 & 2 p14 for available Aircap/Nozzle sizes

Operational Description

This **Advance HD** Spray Gun is a professional quality gun designed with both high volume, low pressure (HVLP) technology or EPA compliant, Trans-Tech® technology. The ADVANCE HD is suitable for a wide range of paints, dyes, stains, glazes and lacquers.

IMPORTANT: These Sprayguns are suitable for use with both waterbased and solvent based coating materials. These guns are not designed for use with highly corrosive and/or abrasive materials and if used with such materials it must be expected that the need for cleaning and/or replacement of parts will be increased. If there is any doubt regarding the suitability of a specific material, contact your DeVilbiss Distributor or DeVilbiss direct.

NOTE: This gun is not to be used with halogenated hydrocarbon solvents or cleaning agents such as 1,1,1,-Trichloroethane or methylene chloride. These solvents can react with the aluminium components used in this gun and cup. The reaction can become violent and lead to an equipment explosion.

© 2013 Finishing Brands UK Ltd.

Kit contents (all models)			
1	ADVANCE HD Suction or Pressure Feed Spraygun	1	Spanner (10mm and 14mm A/F)
1	TGC 1 litre Suction feed Cup (Suction models only)	1	Torx/Flat blade screwdriver
1	Cup Filter (Suction models only)	1	Cleaning Brush
1	Set of 4 coloured identification rings	1	Service bulletin

Construction Features			
1	Air Cap (nickel plated brass for long durability)	10	Fan Air Adjustment (stepless regulation for fan to round spray)
2	Air Cap Retaining Ring (allows easy rotation of air cap)	11	Fluid Adjustment (stepless regulation of fluid volume)
3	Fluid Nozzle (ideal for automotive topcoat systems)	12	Interchangeable Colour ID System (4 coloured rings supplied)
4	Fluid Needle (grooved stem for easy removal)	13	Anodised, forged aluminium gun body (ergonomic, good looking & durable, easy to clean)
5	Fluid Inlet (3/8 BSP thread – accepts DeVilbiss and most other cup systems)	14	1 litre Aluminium Suction Cup (Suction models only)
6	Air Inlet (universal thread, accepts ¼ BSP & 1/4 NPS)	15	Cup Lid with Drip Free diaphragm
7	Self Adjusting Needle Packing (for trouble free operation)	16	Air Valve (design offers low pull force & low pressure drop)
8	Trigger (ergonomic for comfort)	17	Gun acceptable for waterborne and solvent borne applications
9	Trigger Stud & Screw (easy replacement design)		

Materials of Construction	
Gun Body	Anodised aluminium
Air Cap,	Nickel plated brass
Fluid Nozzle, Fluid Needle, Fluid Inlet, Trigger Stud	Stainless steel
Adjusting Knobs	Anodised aluminium
Springs, Clips, Screws	Stainless steel
Seals, Gaskets	Solvent resistant materials
Trigger	Chrome plated steel
Air Inlet, Body Bushing, Spreader Valve Body, Air Valve Nut, Air Cap Retaining Ring, Knobs	Chrome plated brass
Air Valve Assembly	Stainless Steel, HPDE
Cup	Aluminium Cup, Lid and tube, Composite resin Cam

Specifications & Technical Data	
Air Supply Connection	Universal 1/4" (fits ¼" BSP and 1/4" NPS male)
Maximum Static Air Inlet Pressure	P1 = 12 bar (175 psi)
Maximum Static Fluid Inlet Pressure	P2 = 14 bar (203 psi)
Fluid Supply Connection	Universal 3/8" (fits 3/8" BSP and 3/8" NPS male)
Service Temperature	0 to 40°C (32 to 104°F)
Gun Weight (gun only) (cup only)	495g 420g

© 2013 Finishing Brands UK Ltd.

⚠ SAFETY WARNINGS

Fire and explosion



Solvents and coating materials can be highly flammable or combustible when sprayed. ALWAYS refer to the coating material supplier's instructions and COSHH sheets before using this equipment.



Users must comply with all local and national codes of practice and insurance company requirements governing ventilation, fire precautions, operation and house-keeping of working areas.



This equipment, as supplied, is NOT suitable for use with Halogenated Hydrocarbons.



Static electricity can be generated by fluid and/or air passing through hoses, by the spraying process and by cleaning non-conductive parts with cloths. To prevent ignition sources from static discharges, earth continuity must be maintained to the spray gun and other metallic equipment used. It is essential to use conductive air and/or fluid hoses.

Personal Protective Equipment





Toxic vapours – When sprayed, certain materials may be poisonous, create irritation or be otherwise harmful to health. Always read all labels, safety data sheets and follow any recommendations for the material before spraying. If in doubt, contact your material supplier.



The use of respiratory protective equipment is recommended at all times. The type of equipment must be compatible with the material being sprayed.



Always wear eye protection when spraying or cleaning the spray gun.



Gloves must be worn when spraying or cleaning the equipment.

Training – Personnel should be given adequate training in the safe use of spraying equipment.

Misuse

Never aim a spray gun at any part of the body.

Never exceed the maximum recommended safe working pressure for the equipment.

The fitting of non-recommended or non-original spares may create hazards.

Before cleaning or maintenance, all pressure must be isolated and relieved from the equipment.

The product should be cleaned using a gun-washing machine, and should be removed and dried immediately after cleaning is completed. Prolonged exposure to cleaning solutions can cause damage to the product.

Noise Levels



The A-weighted sound level of spray guns may exceed 85 dB (A) depending on the set-up being used. Details of actual noise levels are available on request. It is recommended that ear protection is worn at all times when spraying.

Operating

Spray equipment using high pressures may be subject to recoil forces. Under certain circumstances, such forces could result in repetitive strain injury to the operator.

© 2013 Finishing Brands UK Ltd.

PARTS LIST

REF. NO.	DESCRIPTION	PART NO.	QTY
1	Air Cap Retaining Ring	-	1
2	Slip Ring	-	1
3	Air Cap	-	1
4	Air Cap Retaining Clip	JGA-156-K5	1
5	Retaining Ring Seal	-	1
6	Aircap & Ring	See chart 1 p14	1
7	Air Cap Retaining Ring & Seals	ADV-403-K	1
8	Fluid Nozzle	See chart 2 p14	1
9	Separator	SP-626-K5	1
10	Fluid Nozzle Kit	See chart 2 p14	1
*12	Body Bushing Seal	-	1
13	Body Bushing	-	1
14	Body Bushing & Seal	SN-6-K	1
15	Fluid Needle	See chart 2 p14	1
*16	Needle Spring	-	1
*17	Needle Spring Pad	-	1
18	Fluid Adjusting Knob	-	1
19	Fluid Adjusting Knob, Spring & Pad Kit	ADV-6-K	1
*20	Retaining Clip	-	2
21	Spreader Valve Body	-	2
*22	Spreader Valve Seal	-	2
23	Spreader Valve Adjusting Knob	-	2
*24	Spreader Valve Pin	-	2
25	Spreader & Airflow Valve Assembly	ADV-401-K	2
*26	Needle Packing	-	1
*27	Packing Spring	-	1
*28	Packing Nut	-	1
29	Packing, Spring & Packing Nut Kit	SN-404-K	1
30	Air Valve Body	-	1
31	Air Valve Cage	-	1

REF. NO.	DESCRIPTION	PART NO.	QTY
32	Air Valve Poppet	-	1
33	Air Valve Spring	-	1
34	Air Valve Spring Pad	-	1
35	Air Valve Seal	SN-34-K5	1
36	Air Valve Assembly	SN-402-K	1
*37	Trigger Stud Screw (T20 TORX)	-	1
38	Trigger	-	1
*39	Trigger Stud	-	1
40	Trigger, Stud & Screw Kit	SN-63-K	1
42	Air Inlet	SN-9-K	1
43	Colour ID Ring Kit (4 Colours)	SN-26-K4	1
45	Stud and Screw kit	SN-405-K5	1
46	Air valve Service Tool	-	1
47	Torx Key	SPN-8-K2	1
54	Fluid Inlet Connector	-	1
55	Lock Nut	-	1
56	Seal	-	1
57	Fluid Inlet Connector Kit	ADV-7-K	1

Suction Cup Models only

58	Suction Cup	KR-566-1-B	1
59	Cup Lid Gasket - kit of 3	KR-11-K3	1
60	Drip Check Diaphragm- Kit of 5	KR-115-K5	1
61	Filter – Kit of 10	KR-484-K10	1
62	Lid Assembly	KR-4001-B	1
63	Cup	KR-466-K	1

SERVICE PARTS

Spray Gun repair kit (includes items marked *)	PRO-415-1
Seal and Pin Kit, kit of 5 (items 20, 22 and 24)	GTI-428-K5

For accessories, see page 17

© 2013 Finishing Brands UK Ltd.

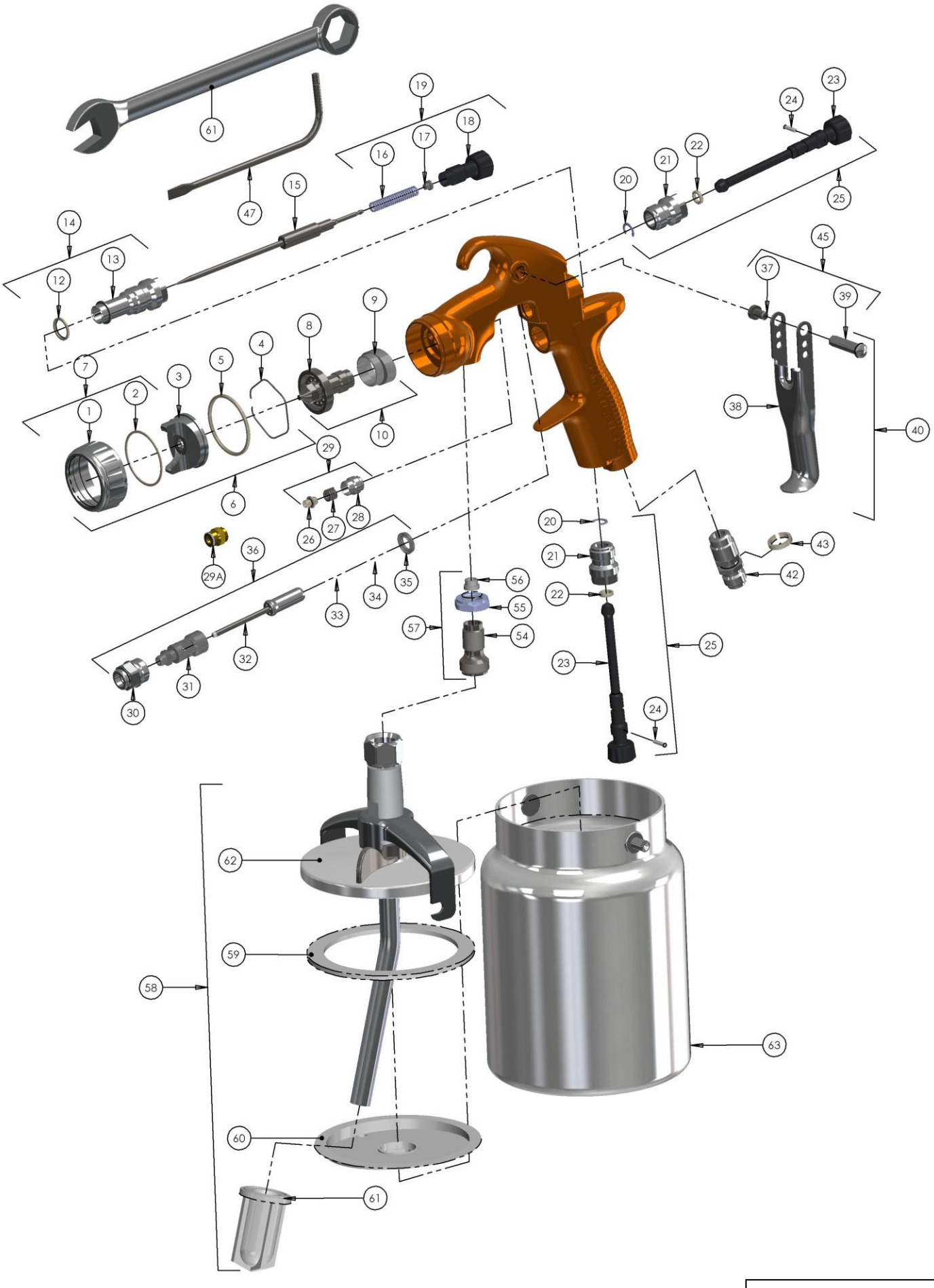

PATENT GB2417544

© 2013 Finishing Brands UK Ltd.

INSTALLATION

For maximum transfer efficiency, do not use more pressure than is necessary to atomise the material being applied. **NOTE: when using the 505, HVLP setup do not exceed 1.3 bar inlet pressure.**

1. Connect the gun to a clean, moisture and oil free air supply using a conductive hose, of at least 8 mm I.D.

NOTE

Depending on hose length, larger I.D. hose may be required. Install an air gauge at the gun handle. When gun is triggered on, adjust regulated pressure to 2.0 bar for Trans-tech Aircaps and 1.3bar for HVLP. Do not use more pressure than is necessary to atomise the material being applied. Excess pressure will create additional overspray and reduce transfer efficiency.

NOTE

If quick connect couplings are required, use only high flow quick connects approved for HVLP use. Other types will not flow enough air for correct gun operation.

NOTE

If an air adjusting valve is used at the gun inlet, use DGIPRO-502-bar Digital Gauge. Some competitive adjusting valves have significant pressure drop that can adversely affect spray performance. The DGI Digital Gauge has minimal pressure drop, which is important for HVLP spraying.

2. **SUCTION MODELS ONLY**. Attach the cup lid assembly (62) to the fluid inlet connector (54). Position the yoke at right angles to the gun with the cam lever to the front (see picture). Make sure the vent hole in drip free diaphragm (60) is 180° to the lid vent hole. The position of the Drip Free Valve (63) is not important.

3. **PRESSURE FEED MODELS**. Connect the fluid supply hose to Fluid inlet Connector (54).

NOTE

Before using the spraygun, flush it with solvent to ensure that the fluid passages are clean.

OPERATION (**SUCTION MODELS**)

1. Mix coating material to manufacturer's instructions and strain material.
2. Fill the cup to no more than 20 mm from the top of the cup. DO NOT OVERFILL.
3. Attach to Cup Lid.

ALL MODELS

4. Turn fluid adjusting knob (18) clockwise to prevent fluid needle movement.
5. Turn spreader valve adjusting knob (23) counter clockwise to fully open.
6. Adjust inlet air pressure if required.
7. Turn fluid adjusting knob counter clockwise until first thread shows.
8. Test spray. If the finish is too dry, reduce airflow by reducing air inlet pressure.
9. If finish is too wet, reduce fluid flow by turning fluid adjusting knob (18) clockwise. If atomisation is too coarse, increase inlet air pressure. If too fine, reduce inlet pressure.
10. The pattern size can be reduced by turning spreader valve knob (23) clockwise.
11. Hold gun perpendicular to surface being sprayed. Arcing or tilting may result in uneven coating.
12. The recommended spray distance is 150-200 mm.
13. Spray edges first. Overlap each stroke a minimum of 75%. Move gun at a constant speed.
14. Always turn off air supply and relieve pressure when gun is not in use.

PREVENTIVE MAINTENANCE & CLEANING

To clean air cap and fluid nozzle, brush exterior with a stiff bristle brush. If necessary to clean cap holes, use a broom straw or toothpick if possible. If a wire or hard instrument is used, extreme care must be used to prevent damaging the holes which will cause a distorted spray pattern.

To clean fluid passages, remove excess material from cup, or disconnect hose for pressure models, then flush with gun wash solution. Wipe the gun exterior with a dampened cloth. Never completely immerse in any solvent or cleaning solutions as this is detrimental to the lubricants and life of the spray gun.

NOTE

When replacing the fluid nozzle or fluid needle, replace both at the same time. Using worn parts can cause fluid leakage. See page 14, Chart 2. Also, replace the needle packing at this time. Torque the fluid nozzle to 9–11 nm. Do not over tighten.

CAUTION

To prevent damage to fluid nozzle (8) or fluid needle (15), be sure to either 1) pull the trigger and hold while tightening or loosening the fluid nozzle, or 2) remove fluid adjusting knob (18) to relieve spring pressure against needle collar.

SUCTION CUP. Empty excess material and clean the cup. Make sure the vent holes in the Diaphragm (60) and the lid (63) are clear.

© 2013 Finishing Brands UK Ltd.

Parts Replacement/Maintenance

AIR VALVE INSTRUCTIONS

Servicing Air Valve
Reasons to service air valve:

A) Air valve not functioning correctly (may need cleaning).
B) Routine maintenance.

C) Air leaks (advise replacement, see p10)

1. Before removing the Airvalve, first remove the fluid inlet Adaptor. (See figs 49 – 52 p13).
2. Remove trigger using the tool supplied (47) or TORX T20 key. (See fig 1 & 2)
3. Unscrew air valve using 14mm spanner (59). (See fig 3)
4. Remove air valve by gripping stem. (See fig 4)
5. Remove spring with spring pad. (See fig 5)
6. DO NOT REMOVE REAR SEAL (35) FROM GUN BODY. (See fig 6)
7. DO NOT REMOVE PLASTIC CAGE FROM AIR VALVE BODY AS THIS MAY DAMAGE THE CAGE. (See fig 7)
8. CLEAN
   a. Remove all paint build up. (See fig 8)
   b. The 4 poppet holes must be clear. (See fig 9)
   c. Stem must be free to float in poppet. (See fig 10)
   d. Stem must slide through cage bore with slight resistance (due to seal).
   e. Rear seal must look clean and in position in the bore. (See fig 6)
   f. If any of the above cannot be rectified, replace the air valve (See Replacing Air Valve p10).
9. Replace spring ensuring the end with the plastic bearing pad goes in first. (See fig 5)
10. Insert air valve assembly into gun and carefully feed over the spring and through the rear seal. (See fig 11)
11. Tighten air valve assembly using fingers first, and then tighten with 14mm spanner (59). (See figs 12 & 3)
12. Replace trigger. (See figs 2 & 1)
13. If there is an air leak through the gun, the air valve may need replacing (See Replacing Air Valve).

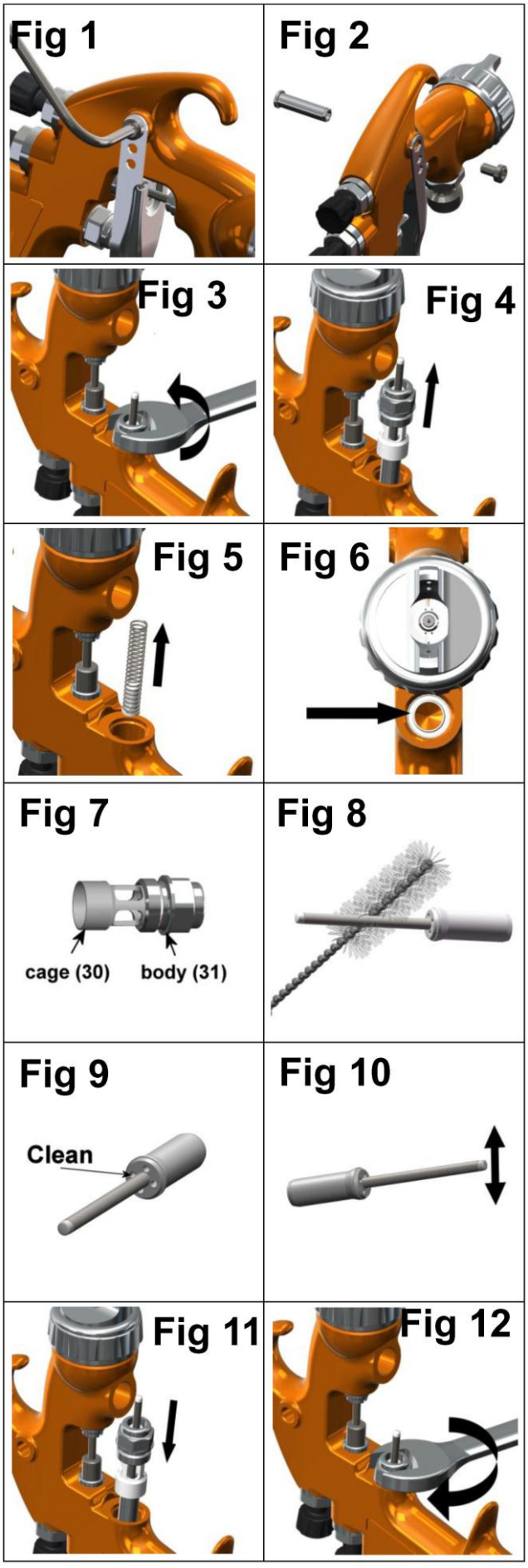

© 2013 Finishing Brands UK Ltd.

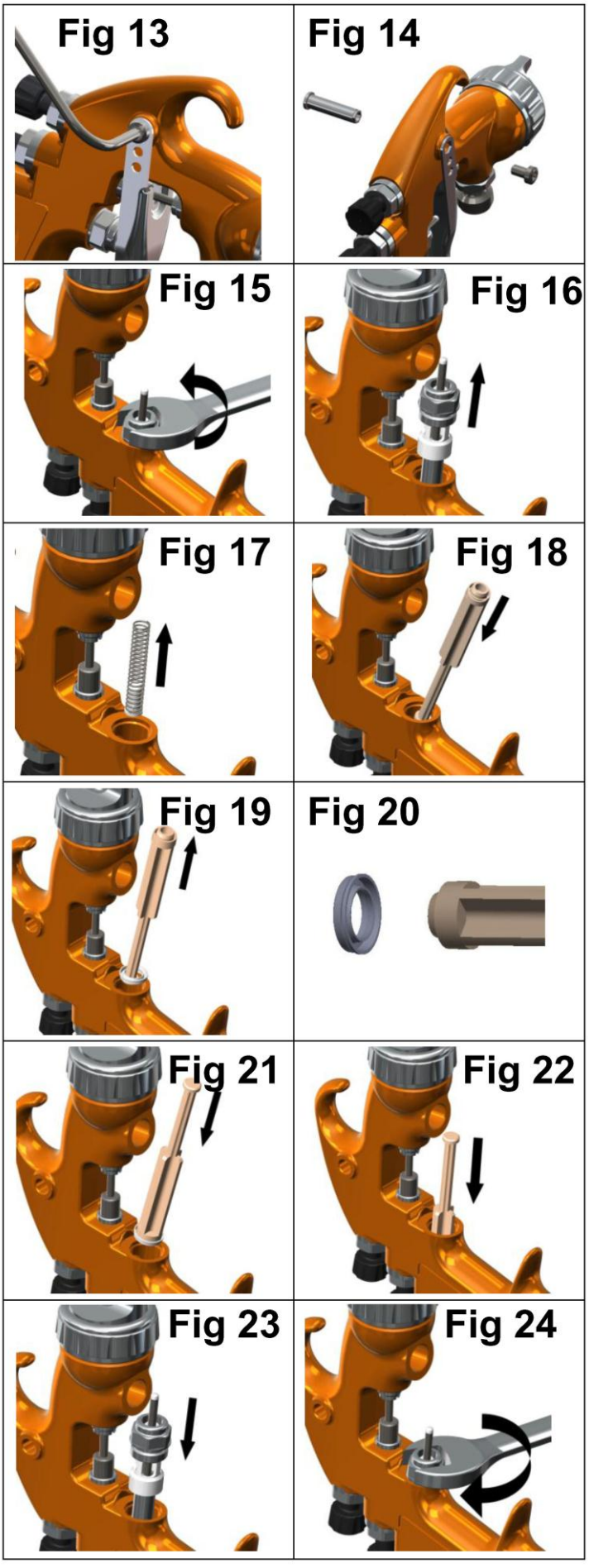

Replacing Air Valve

Reasons to replace air valve:

A) Air leak through the gun.
B) Air valve not operating correctly.

1. Remove trigger using (47) or TORX (T20) key provided in the kit. (See figs 13 & 14)
2. Unscrew air valve using 14mm spanner (59). (See fig 15)
3. Remove air valve by gripping the stem. (See fig 16)
4. Remove spring with spring pad. (See fig 17)
5. Hook out rear seal using Service Tool (56). (See figs 18 & 19)
6. Clean air valve bores in gun body with the brush supplied in the kit.
7. Place new rear seal onto Service tool (56); grooves must fit in service tool form. (See fig 20)
8. Push rear seal firmly into hole up to shoulder, using Service tool. (See figs 21 & 22)
9. Insert new spring, ensuring the end with the plastic bearing pad goes in first. (See fig 17)
10. Insert air valve assembly into gun and carefully feed over the spring and through the rear seal. (See fig 23)
11. Tighten air valve assembly using fingers first, then tighten with 14mm spanner (59). (See figs 24 & 15)
12. Replace trigger. (See figs 14 & 13)

© 2013 Finishing Brands UK Ltd.

Parts Replacement/Maintenance

NEEDLE PACKING

REPLACEMENT INSTRUCTIONS

13. Remove trigger using key (47) or TORX (T20) driver. (See figs 25 & 26)
14. Remove fluid adjusting knob and needle spring with spring pad from gun. (See figs 27 & 28)
15. Remove fluid needle from gun body. (See fig 29)
16. Loosen and remove packing nut using Key (47) or a straight blade screwdriver. (See figs 30 & 31)
17. Discard old packing and packing spring if replacing. Clean packing if reusing. Also clean packing spring and nut. (See fig 32).
18. Re-assemble the packing, (See fig 32). Assemble into gunbody by hand (see fig 33) and then tighten. (See figs 30 and 31)
19. Insert fluid needle all the way into gun body seating in fluid nozzle (See fig 34).
20. Insert needle spring, spring pad, and fluid adjusting knob. (See figs 28 & 27). Reinstall trigger. (See figs 25 & 26).
21. Trigger gun fully and screw in fluid adjusting knob until it stops. Back it off 1/2 turn and gun will have full needle travel.
22. Trigger gun several times to verify correct operation.

SPREADER VALVE ASSEMBLY

REPLACEMENT/MAINTENANCE

The spreader valve assembly can be replaced if damaged. Remove using 14mm spanner (59). (See figs 35 & 36). The internal seal can be replaced and is included in the ADVANCE HD Gun Rebuild Kit.

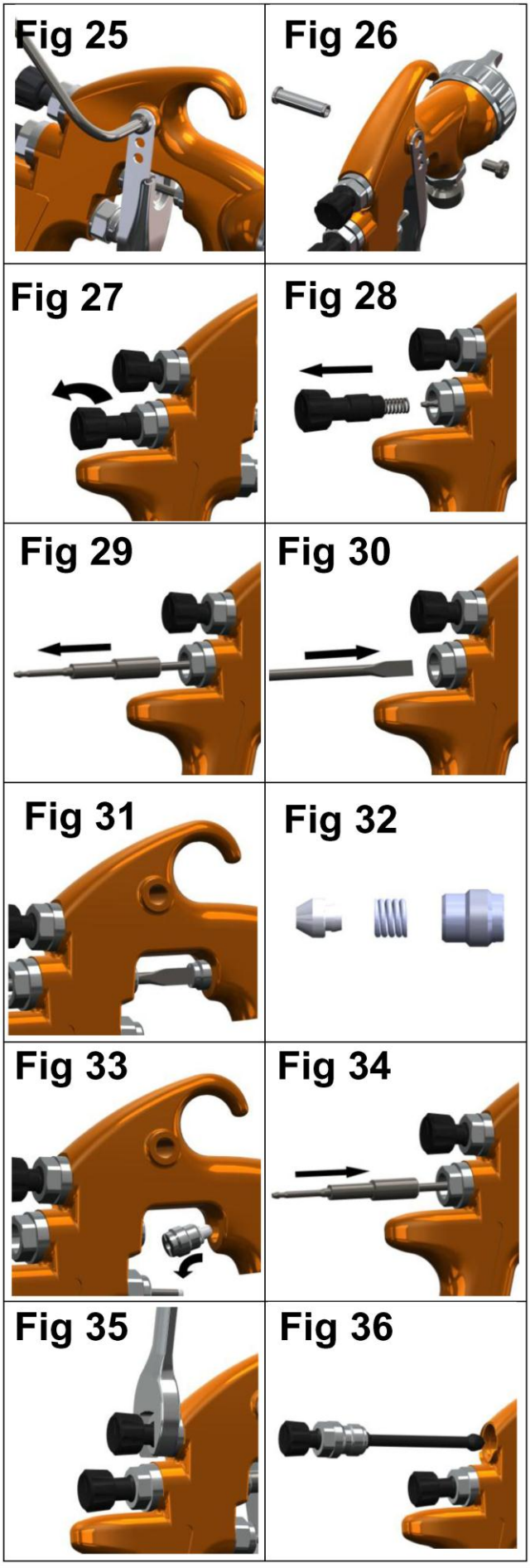

© 2013 Finishing Brands UK Ltd.

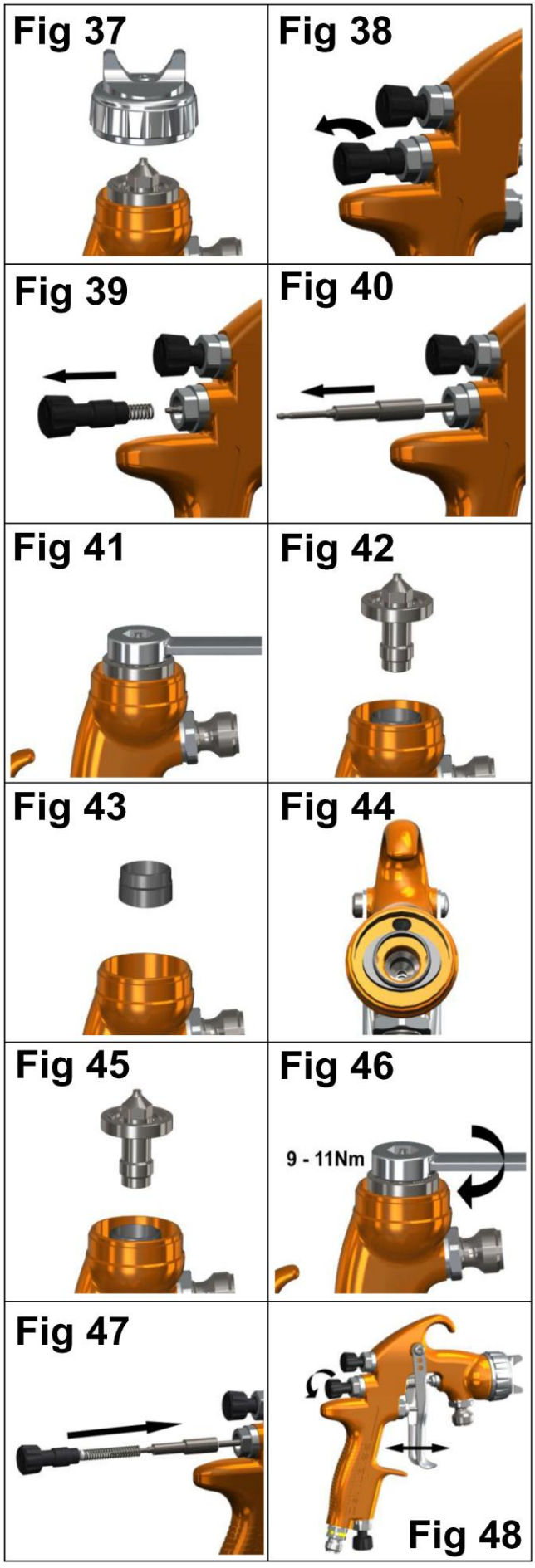

Parts Replacement/ Maintenance

SEPARATOR SEAL REPLACEMENT

1. Remove air cap and retaining ring. (See fig 37)
2. Remove fluid adjusting knob, spring, and spring pad. (See figs 38 & 39)
3. Remove fluid needle from gun body. (See fig 40)
4. Remove fluid nozzle using 10m Spanner (59). (See figs 41, & 42)
5. Remove Separator. (See fig 43).
6. Clean front of gun if required, using a soft brush, as well as the fluid nozzle, air cap, and retaining ring.
7. Place a new Separator Seal into the front of the gun, making sure the elliptical side of the seal is engaged into the recess in the gun. (See fig 44).
8. Fit Fluid Nozzle, Air Cap, and Retaining Ring. Torque the Fluid Nozzle to 9–11 Nm (80–100 lbs. in). Don't over torque the Fluid Nozzle. (See figs 45, 46, and 37)
9. Insert Fluid Needle all the way into the Gun Body, seating in the Fluid Nozzle. (See fig 47)
10. Reassemble Needle Spring, Spring Pad, and Fluid adjusting Knob. (See fig 47)
11. Trigger gun fully and screw in Fluid Adjusting Knob until it stops. Back it off 3 turns and gun will have full needle travel.
12. Trigger gun several times to verify correct operation (see fig 48).

© 2013 Finishing Brands UK Ltd.

Parts Replacement/ Maintenance

FLUID INLET SEAL

1. Loosen Locknut (55) with 18mm Spanner (see Fig 49).
2. Unscrew Fluid Inlet Adaptor (54) with 8mm Hex Key (see fig 50)
3. Remove Fluid Inlet Adaptor (see fig 51).
4. Remove seal (56) and replace with new Seal (see fig 52).
5. Replace in reverse order, Fluid Inlet Adaptor (see Fig 51) .
6. Tighten with 8mm Hex Key to 26 – 28Nm. (see Fig 50).
7. Tighten Lock Nut (55) with 18mm Spanner (see Fig 49).

SUCTION CUP LID

1. Remove drip free diaphragm (60). Clean or replace. Make sure the vent hole is kept clear. (See Fig 53).
2. Remove Cup Gasket (59) (see Fig 54).
3. Make sure the vent hole in the lid (62) is clean and not blocked. (See Fig 55).
4. It is recommended to replace the Cup Gasket (59) with a new one to avoid Cup leaks (see Fig 56).
5. Re-fit the Drip Free Diaphragm. Position the vent hole in the Diaphragm 180° away from the Vent hole. (See Fig 57).



© 2013 Finishing Brands UK Ltd.

Parts Replacement/Maintenance

Chart 1 – Air Caps

PART No. FOR AIR CAP	SUCTION OR PRESSURE	TECHNLOGY	MARKING ON AIR CAP	RECOMMENDED INLET PRESSURE (bar)	AIR FLOW (L/min) @ 2 bar
SP-100-505-K	SUC & PRESS	HVLP	505	1.3	385
SP-100-510-K	SUC & PRESS	TRANS-TECH®	510	2.0	283
SP-100-513-K	PRESSURE	TRANS-TECH®	513	2.0	394
SP-100-523-K	PRESSURE	TRANS-TECH®	523	2.0	410
SP-100-590-K	PRESSURE	TRANS-TECH®	590	2.0	218

NOTE: When removing air cap from retaining ring, don't remove the Slip Ring (2) or Retaining Ring Seal (5) from the Retaining Ring. Damage to the parts may occur. Slip ring and Retaining Ring seal are not available as replacements. Simply wipe parts clean and reassemble with new or clean air cap.

Chart 2 – Fluid Nozzle Range & Fluid Needle

PART No. ON FLUID NOZZLE	PART No. NEEDLE	FOR AIRCAPS
SP-200S-085-K	ADV-310-085-K	505 510 513 523
SP-200S-10-K	ADV-310-10-K	
SP-200S-12-K	ADV-310-12-K	
SP-200S-13-K	ADV-310-13-K	
SP-200S-14-K	ADV-310-14-K	
SP-200S-16-K	ADV-310-16-K	
SP-200S-18-K	ADV-310-18-K	
SP-200S-20-K	ADV-310-20-K	
SP-200S-22-K	ADV-310-22-K	
SP-259S-05-K	ADV-310-05-K	590
SP-259S-07-K	ADV-310-07-K	
SP-259S-10-K	ADV-310-10-K	

Chart 3 – Optional Fluid Nozzles & Fluid Needles

PART No. ON FLUID NOZZLE	PART No. NEEDLE	MATERIAL	FOR AIRCAPS
SP-200N-14-K	ADV-310N-14-K	HARDENED	505 510 513 523
SP-200N-18-K	ADV-310N-18-K	HARDENED	
SP-200N-22-K	ADV-310N-22-K	HARDENED	
SP-200S-10-K	ADV-310P-10-K	PLASTIC TIPPED	
SP-200S-12-K	ADV-310P-12-K	PLASTIC TIPPED	
SP-200S-14-K	ADV-310P-14-K	PLASTIC TIPPED	

NOTE: When replacing the fluid nozzle or fluid needle, replace both at the same time. Torque to 9–11 Nm (80–100 ft-ins). Don't over tighten the fluid nozzle. Use SN-28 10mm Spanner supplied with the gun and check with a torque wrench.

© 2013 Finishing Brands UK Ltd.

Troubleshooting Possible Problems in Operation

CONDITION	CAUSE	CORRECTION
Heavy top or bottom pattern 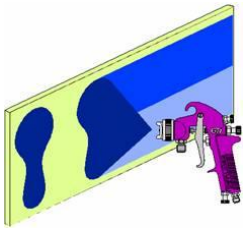	Horn holes plugged.	Clean. Ream with non-metallic point.
	Obstruction on top or bottom of fluid nozzle.	Clean.
	Cap and/or nozzle seat dirty.	Clean.
Heavy right or left side pattern 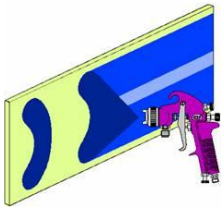	Left or right side horn holes plugged.	Clean. Ream with non-metallic point.
	Dirt on left or right side of fluid nozzle.	Clean.
Remedies for the top-heavy, bottom-heavy, right-heavy, and left-heavy patterns: 1. Determine if the obstruction is on the air cap or the fluid nozzle. Do this by making a test spray pattern. Then, rotate the cap one-half turn and spray another pattern. If the defect is inverted, obstruction is on the air cap. Clean the air cap as previously instructed. Also check for dried paint just inside the cap centre hole opening; remove by washing with solvent. 2. If the defect is not inverted, it is on the fluid nozzle. Clean nozzle. If problem persists, renew nozzle.		
Heavy centre pattern 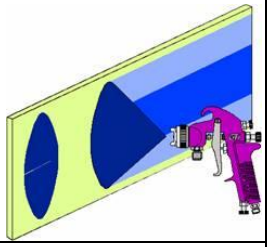	Spreader adjustment valve set too low.	Turn out counter clockwise to achieve correct pattern.
	Atomising pressure too low.	Increase pressure.
	Material too thick.	Thin to correct consistency.
Split spray pattern 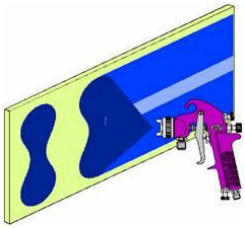	Air pressure too high.	Reduce at regulator or gun handle.
	Fluid adjusting knob turned in too far.	Turn out counter clockwise to achieve correct pattern.
	Spreader adjusting valve set too high.	Turn in clockwise to achieve correct pattern.
Jerky or fluttering spray 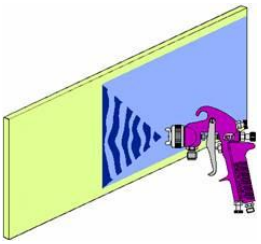	Loose or damaged fluid nozzle/seat	Tighten or replace
	Loose or broken cup fluid nipple	Tighten or replace cup
	Material level too low	Refill
	Container tipped too far	Hold more upright
	Obstruction in fluid passage	Back flush with solvent
	Loose fluid needle packing nut	Tighten
	Damaged fluid needle packing	Replace
Paint bubbles in cup	Fluid nozzle not tight.	Tighten to 14–16 nm (10-12 ft-lbs).
Fluid leaking or dripping from cup lid	Cup lid loose.	Tighten Cup Lid.
	Damaged Cup Lid Gasket	Replace Cup lid Gasket
	Fluid leaking from vent hole	Clean drip free diaphragm

© 2013 Finishing Brands UK Ltd.

Troubleshooting Possible Problems in Operation (cont)		
Starved spray pattern	Inadequate material flow Blocked vent in Cup lid Low atomisation air pressure	Wind fluid adjusting knob out or change to larger fluid nozzle size Clean lid and unblock vent Increase air pressure and rebalance gun.
Excessive overspray	Air pressure to high. Gun too far from work surface.	Reduce air pressure. Adjust to correct distance.
Dry spray	Air pressure too high. Gun too far from work surface. Gun motion too fast. Fluid flow too low.	Reduce air pressure. Adjust to correct distance. Slow down. Wind out needle adjusting screw or use larger nozzle size.
Fluid leaking from packing nut	Packing or Fluid Needle worn.	Replace.
Fluid leaking or dripping from front of gun	Fluid nozzle or fluid needle worn or damaged. Foreign matter in fluid nozzle. Fluid needle dirty or stuck in needle packing Wrong size fluid needle or fluid nozzle.	Replace fluid nozzle and fluid needle. Clean. Clean Replace fluid nozzle and fluid needle.
Runs and sags	Too much material flow. Material too thin. Gun tilted on an angle, or gun motion too slow.	Turn fluid adjusting knob clockwise or switch to smaller fluid nozzle and fluid needle size. Mix correctly or apply light coats. Hold gun at right angle to work and adapt to correct gun technique.

© 2013 Finishing Brands UK Ltd.

ACCESSORIES					
DGi Digital Pressure Gauge	DGIPRO-502-BAR		MC-1-K50	600 cc Mixing Cups pack of 50	
Spanner	SN-28-K		10m x 8mm bore rubber air hose with ¼ fittings	H-6065-B (BSP) H-6065-N (NPS)	
Torx driver	SPN-8-K2		QD Female connector	MPV-424	
MPV Swivel	MPV-60-K3		QD male connector	MPV-5	
Cleaning Brush	4900-5-1-K3		DVFR Filter Regulator	DVFR-8	

WARRANTY

This product is covered by Finishing Brands UK Limited one year warranty.

Finishing Brands UK Limited,
Ringwood Road,
Bournemouth,
BH11 9LH,
UK.
Tel.No: 01202 571111
Fax No: 01202 581940
Website address: http:// www.finishingbrands.eu

Registered office:
Finishing Brands UK Limited,
400, Capability Green,
Luton,
Bedfordshire,
LU1 3AE,
UK.
Registered in England No: 07656273
Vat No: GB 113 5531 50

© 2013 Finishing Brands UK Ltd.