INSTALLATION MANUAL EN

77-3206

MX1231 & MXL1231
Pump & Packages

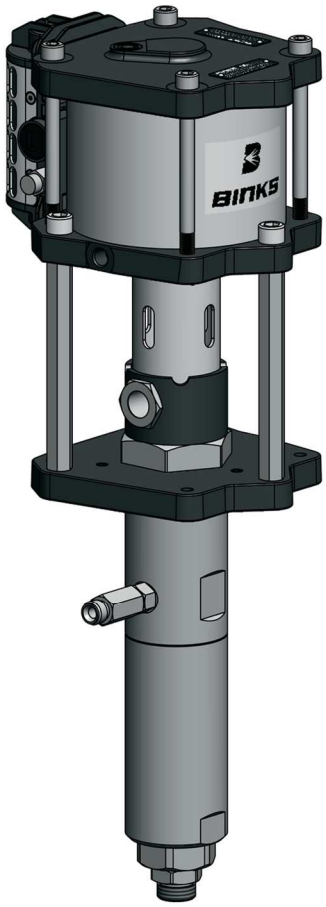

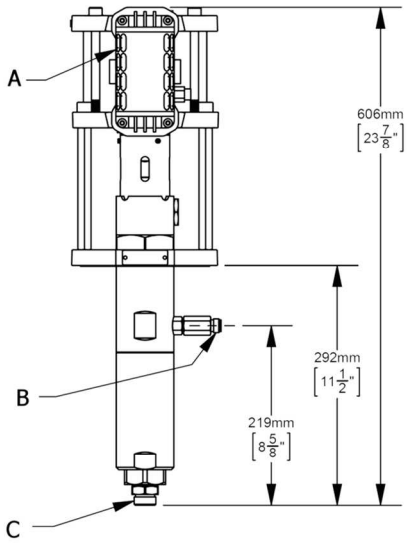

Patent 7,603,855

Models: MX1231‡‡ & MXL1231‡‡, ‡‡=PL (PTFE/Leather), PP (PTFE), PU (PTFE/UHMWPE), UC (U-Cups)

ADDITIONAL RESOURCES

For additional information or copies of your service manual, please visit us online at:
binks.com/en/library

Obey local or municipal regulations for product recycling and disposal.

IMPORTANT! DO NOT DESTROY
It is the Customer's responsibility to have all operators and service personnel read and understand this manual. Contact your local Binks representative for additional copies of this manual.
READ ALL INSTRUCTIONS BEFORE OPERATING THIS PRODUCT

Product Description / Object of Declaration:	**104XXX, AX160L-X, AX110L-X, AX200L-XX, AX260L-XX, AX320X-X, MMX4*****, MMX12****, MXL4*****, MXL12****, MX114****, MX12*****, MX19*****, MX2******, MX4******, MX8********
This Product is designed for use with:	**Solvent & Waterbased Materials**
Suitable for use in hazardous area:	**Zone 1/Zone 2**
Protection Level:	**II 2 G c X IIB T4** **Ex h IIB T4 Gb X**
Notified body details and role:	**Element Materials Technology Rotterdam B.V. (2812)**
	Lodging of ATEX Technical file
This Declaration of Conformity / Incorporation is issued under the sole responsibility of the manufacturer:	**Binks U.K. Limited,** **Ringwood Road,** **Bournemouth, BH11 9LH. UK**
Representative authorised to compile the technical file	**President @. Binks France SAS** **5 Place Pierre Semard, 94130 Nogent sur Marne , Paris, France**

EU Declaration of Conformity

This Declaration of Conformity / Incorporation is issued under the sole responsibility of the manufacturer:

Machinery Directive 2006/42/EC
ATEX Directive 2014/34/EU
by complying with the following statutory documents and harmonised standards:
EN ISO 12100:2010 Safety of Machinery - General Principles for Design
EN 12621:2006+2010 Machinery for the supply and circulation of coating materials under pressure - Safety requirements
EN ISO 80079-36:2016 Explosive Atmospheres- Part 36:Non Electrical equipment for explosive atmospheres-Basic methods and requirements.
EN ISO 80079-37:2016 Explosive Atmospheres- Part 37: Non Electrical equipment for explosive atmospheres - protection by methods "c", "b" and "k".
EN 1127-1:2019 Explosive atmospheres - Explosion prevention - Basic concepts

Providing all conditions of safe use / installation stated within the product manuals have been complied with and also installed in accordance with any applicable local codes of practice.

Signed for and on behalf of Binks U.K. Ltd:		F. A. Sutter	Executive President: Engineering and Operations, Shoreview, MN, 55126. USA
Document Part No. . EN		22/04/2025	

Product Description / Object of Declaration:	**104XXX, AX160L-X, AX110L-X, AX200L-XX, AX260L-XX, AX320X-X, MMX4*****, MMX12****, MXL4*****, MXL12****, MX114****, MX12*****, MX19*****, MX2******, MX4******, MX8********
This Product is designed for use with:	**Solvent & Waterbased Materials**
Suitable for use in hazardous area:	**Zone 1/Zone 2**
Protection Level:	**II 2 G c X IIB T4** **Ex h IIB T4 Gb X**
Approved body details and role:	**Element Materials Technology Warwick Ltd. UK. (0891)**
	Lodging of UKEX Technical file
This Declaration of Conformity / Incorporation is issued under the sole responsibility of the manufacturer:	**Binks U.K. Limited,** **Ringwood Road,** **Bournemouth, BH11 9LH. UK**

UKCA Declaration of Conformity

This Declaration of Conformity / Incorporation is issued under the sole responsibility of the manufacturer:

Supply of Machinery (Safety) Regulations 2008
Equipment and Protective Systems Intended for use in Potentially Explosive Atmospheres Regulations 2016
by complying with the following statutory documents and designated standards:
BS EN ISO 12100:2010 Safety of Machinery - General Principles for Design
BS EN 12621:2006+2010 Machinery for the supply and circulation of coating materials under pressure - Safety requirements
BS EN ISO 80079-36:2016 Explosive Atmospheres- Part 36:Non Electrical equipment for explosive atmospheres-Basic methods and requirements.
BS EN ISO 80079-37:2016 Explosive Atmospheres- Part 37: Non Electrical equipment for explosive atmospheres - protection by methods "c", "b" and "k".
BS EN 1127-1:2019 Explosive atmospheres - Explosion prevention - Basic concepts

Providing all conditions of safe use / installation stated within the product manuals have been complied with and also installed in accordance with any applicable local codes of practice.

Signed for and on behalf of Binks U.K. Ltd:		F. A. Sutter	Executive President: Engineering and Operations, Shoreview, MN, 55126. USA
Document Part No. . EN		20/05/2025	

In this part sheet, the words WARNING, CAUTION and NOTE are used to emphasize important safety information as follows:

WARNING	CAUTION	NOTE
Hazards or unsafe practices which could result in severe personal injury, death or substantial property damage.	Hazards or unsafe practices which could result in minor personal injury, product or property damage	Important installation, operation or maintenance information.

WARNING

Read the following warnings before using this equipment.

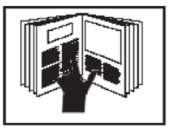

READ THE MANUAL. Before operating finishing equipment, read and understand all safety, operation and maintenance information provided in the operation manual.

WEAR SAFETY GLASSES. Failure to wear safety glasses with side shields could result in serious eye injury or blindness.

DE-ENERGIZE, DE-PRESSURISE, DISCONNECT AND LOCK OUT ALL POWER SOURCES DURING MAINTENANCE. Failure to de-energize, disconnect and lock out all power supplies before performing equipment maintenance could cause serious injury or death.

NOISE LEVELS. The A-weighted sound level of pumping and spray equipment may exceed 85 dB(A) depending on equipment settings. Actual noise levels are available on request. It is recommended that ear protection is worn at all times while equipment is in use.

INSPECT THE EQUIPMENT DAILY. Inspect the equipment for worn or broken parts on a daily basis. Do not operate the equipment if you are uncertain about its condition.

EQUIPMENT MISUSE HAZARD. Equipment misuse can cause the equipment to rupture, malfunction or start unexpectedly and result in serious injury.

HIGH PRESSURE CONSIDERATION. High pressure can cause serious injury. Relieve all pressure before servicing. Spray from the gun, hose leaks or ruptured components can inject fluid into your body and cause extremely serious injury.

STATIC CHARGE. Fluid may develop a static charge that must be dissipated through proper grounding of the equipment, objects to be sprayed and alll other electrically conductive objects in the dispensing area. Improper grounding or sparks can cause a hazardous condition and result in fire, explosion or electric shock and other serious injury.

PROP 65 WARNING. WARNING: This product contains chemicals known to the state of California to cause cancer and birth defects or other reproductive harm.

AUTOMATIC EQUIPMENT. Automatic equipment may start suddenly without warning.

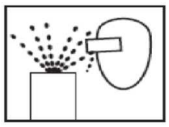

PROJECTILE HAZARD. You may be injured by venting liquids or gases that are released under pressure, or flying debris.

KNOW WHERE AND HOW TO SHUT OFF THE EQUIPMENT IN CASE OF AN EMERGENCY.

PRESSURE RELIEF PROCEDURE. Always follow the pressure relief procedure in the equipment instruction manual.

OPERATOR TRAINING. All personnel must be trained before operating finishing equipment.

PACEMAKER WARNING. You are in the presence of magnetic fields which may interfere with the operation of certain pacemakers.

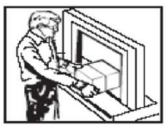

KEEP EQUIPMENT GUARDS IN PLACE. Do not operate the equipment if the safety devices have been removed.

NEVER MODIFY THE EQUIPMENT. Do not modify the equipment unless the manufacturer provides written approval.

PINCH POINT HAZARD. Moving parts can crush and cut. Pinch points are any areas where ther are moving parts.

IT IS THE RESPONSIBILITY OF THE EMPLOYER TO PROVIDE THIS INFORMATION TO THE OPERATOR OF THE EQUIPMENT.

Models: MX1231‡‡ & MXL1231‡‡, ‡‡=PL (PTFE/Leather), PP (PTFE), PU (PTFE/UHMWPE), UC (U-Cups)

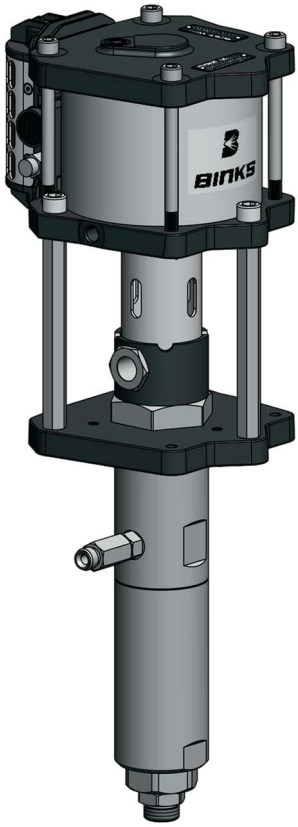

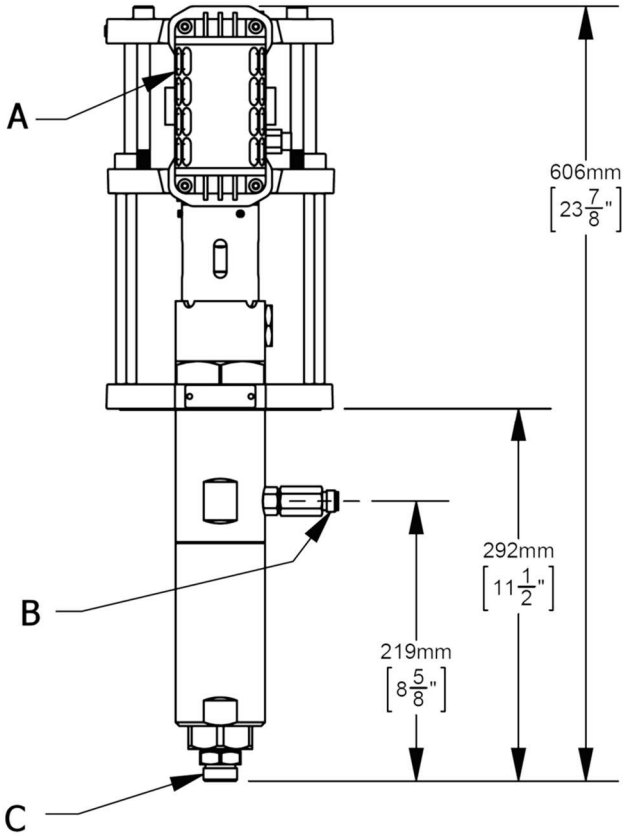

Patent 7,603,855

	SPECIFICATION - Bare Pump	
	Ratio:	31:1
	Maximum air inlet pressure:	8 bar [116 psi]
	Maximum fluid pressure:	248 bar [3596 psi]
	Displacement per cycle:	72 cc [2.4 oz]
	Output @ 60 cycles / min:	4.3 l/m [1.2 US gal/m]
	Air consumption @ 20 cycles/min and 8 bar [116 psi] air inlet pressure:	498 l/m [17.6 SCFM]
	Maximum recommended continous cycle rate [cycles/min]:	20
A	Air inlet connection:	Ø12mm Hose
C	Fluid inlet connection:	3/4" NPS(m)
B	Fluid outlet connection:	3/8" BSP(m)/NPS(m)
	Sound level:	97.3 dB
	Weight:	16 kg [35.5lbs]
	Wetted parts materials of construction:	Stainless Steel, Tungsten Carbide, PTFE, Polyethylene, Leather, Ceramic.

PUMP OPERATION AND CLEANING

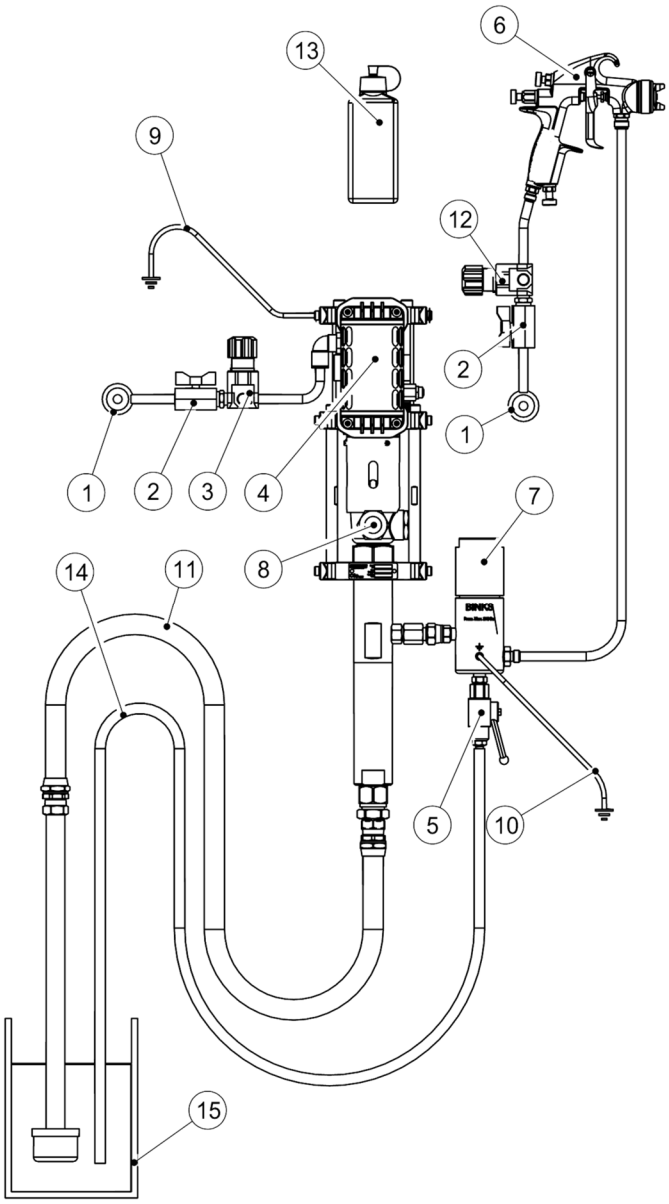

1	AIR SUPPLY
2	AIR SHUT OFF VALVE (IF FITTED)
3	AIR PRESSURE REGULATOR
4	BINKS PUMP
5	FLUID PRESSURE RELIEF VALVE (IF FITTED)
6	SPRAY GUN
7	FLUID FILTER (IF FITTED)
8	LUBRICATION CUP & LEVEL
9	EARTH CABLE AIR MOTOR
10	EARTH CABLE FLUID FILTER (IF FITTED)
11	FLUID SUCTION HOSE/SUCTION TUBE/GRAVITY HOPPER - DEPENDING ON MODEL
12	AIR PRESSURE REGULATOR (SPRAY GUN) (IF FITTED)
13	LUBRICANT 0114-016099 SOLVENT BASED MATERIALS 0114-016100 WATER BASED MATERIALS
14	RELIEF/RETURN HOSE (IF FITTED)
15	FLUID CONTAINER

⚠ WARNING	WEAR EYE PROTECTION WHEN OPERATING THIS EQUIPMENT

⚠ WARNING	PUMP MUST BE GROUNDED BEFORE OPERATING, TO PREVENT STATIC CHARGES.
⚠ WARNING	HOSES MUST HAVE A SUITABLE WORKING PRESSURE ABOVE THE MAXIMUM PRESSURE POSSIBLE.

INSTALLATION

1. ENSURE THE PUMP IS LOCATED ON A SUITABLE & STABLE MOUNTING.

2. GROUND/EARTH THE PUMP WITH (9) OR (10), CHECK EARTH IS LESS THAN 1 Ohm.

3. CONNECT SUITABLE HOSES FOR AIR SUPPLY AND FLUID HOSE TO GUN.

4. FILL THE LUBRICATION CUP (8) WITH A SUITABLE LUBRICANT (13) SO IT IS VISIBLE IN THE LEVEL SIGHT GLASS.

5. ENSURE SUITABLE FILTER MESH (100 MESH, 150 µm STD) IS INSTALLED IN THE FILTER(7).

6. ENSURE RETURN HOSE (14) IF FITTED, IS DIRECTED INTO THE FLUID CONTAINER (15).

CLEANING THE PUMP

NOTE	THE PUMP HAS BEEN TESTED WITH OIL, WATER OR OTHER MATERIAL. CLEAN THE PUMP PRIOR TO USE TO AVOID ANY CONTAMINATION.

1. INSERT SUCTION SYSTEM (11) & RETURN HOSE (14) (IF FITTED) INTO A CONTAINER WITH SUITABLE CLEANING FLUID.

2. CLOSE VALVE (2) AND SET REGULATORS (3) & (12) TO ZERO (WIND ANTICLOCKWISE), OPEN VALVE (5) IF FITTED.

3. REMOVE FLUID NOZZLE FROM THE SPRAY GUN FOR RETURNING FLUID INTO THE CONTAINER.

4. CONNECT AIR SUPPLY.

a) IF (5) IS FITTED:

5a. OPEN VALVE (2), INCREASE REGULATOR PRESSURE (3) UNTIL PUMP STARTS TO OPERATE.

6a. ALLOW FLUID TO CIRCULATE FOR SEVERAL MINUTES OR UNTIL SYSTEM IS CLEAN.

7a. CLOSE VALVE (5) AND TRIGGER SPRAY GUN INTO CONTAINER FOR SEVERAL MINUTES TO CLEAN HOSE & GUN.

8a. WITH THE TRIGGER STILL OPEN REDUCE REGULATOR PRESSURE (3) TO ZERO, AND OPEN VALVE (5) IF FITTED AND CLOSE TRIGGER.

b) IF (5) IS NOT FITTED.

5b. TRIGGER SPRAY GUN AND HOLD OVER CONTAINER, OPEN VALVE (2), INCREASE REGULATOR PRESSURE (3) UNTIL PUMP STARTS TO OPERATE.

6b. ALLOW FLUID TO CIRCULATE FOR SEVERAL MINUTES OR UNTIL SYSTEM IS CLEAN.

7b. WITH THE TRIGGER STILL OPEN REDUCE REGULATOR PRESSURE(3) TO ZERO AND ENSURE NO PRESSURE IS LEFT IN THE HOSE AND GUN BEFORE CLOSING THE TRIGGER.

NOTE	REPEAT CLEANING PROCESS UNTIL CLEANING FLUID HAS NO CONTAMINATION, ESPECIALLY IF THE PUMP WILL NOT BE USED IMMMEDIATELY, OR HAS BEEN USED WITH 2 COMPONENT PAINTS.
⚠ **CAUTION**	WHEN THE SPRAY GUN IS NOT IN USE THE SAFTEY LOCK SHOULD BE ENGAGED TO PREVENT ACCIDENTAL OPERATION.

STARTUP

1. INSERT SUCTION SYSTEM (11) & RETURN HOSE (14) (IF FITTED) INTO A CONTAINER WITH THE FLUID TO BE SPRAYED

2. CLOSE VALVE (2) AND SET REGULATORS (3) & (12) TO ZERO (WIND ANTICLOCKWISE), OPEN VALVE (5) IF FITTED.

3. REMOVE SPRAY TIP FROM THE GUN FOR RETURNING FLUID INTO THE CONTAINER.

4. CONNECT AIR SUPPLY

a) IF (5) IS FITTED:

5a. OPEN VALVE (2), INCREASE REGULATOR PRESSURE (3) UNTIL PUMP STARTS TO OPERATE.

6a. WHEN FLUID FLOWS THROUGH HOSE (14) WITHOUT AERATION, CLOSE VALVE (5).

7a. OPEN SPRAY GUN TRIGGER UNTIL FLUID FLOWS INTO CONTAINER WITHOUT AIR, THEN RELEASE TRIGGER.

b) IF (5) IS NOT FITTED.

5b. TRIGGER SPRAY GUN AND HOLD OVER CONTAINER, OPEN VALVE (2), INCREASE REGULATOR PRESSURE (3) UNTIL PUMP STARTS TO OPERATE.

6b. KEEP TRIGGER OPEN UNTIL FLUID FLOWS INTO CONTAINER WITHOUT AERATION, THEN RELEASE TRIGGER.

8. REDUCE REGULATOR PRESSURE (3) TO ZERO.

9. APPLY SPRAY GUN SAFETY LOCK WHILE SPRAY TIP IS FITTED.

10. INCREASE REGULATOR PRESSURE (3) UNTIL DESIRED ATOMISATION IS ACHIEVED FROM SPRAY GUN.

11. INCREASE REGULATOR PRESSURE (12) TO ACHIEVE DESIRED SPRAY FAN.

SHUT DOWN

1. REDUCE REGULATOR PRESSURE (3) AND (12) TO ZERO.

2. TRIGGER GUN TO REDUCE SYSTEM PRESSURE.

3. OPEN VALVE (5) SLOWLY IF FITTED.

4. APPLY SPRAY GUN SAFETY LOCK WHILE SPRAY TIP IS REMOVED

5. TRIGGER GUN CAREFULLY INTO CONTAINER AND ENSURE FLUID SYSTEM IS DE-PRESSURISED.

6. CLOSE VALVE (2) AND REMOVE AIR SUPPLY.

7. APPLY SPRAY GUN SAFETY LOCK.

8. CLEAN AS INSTRUCTED AND SOAK/CLEAN SPRAYGUN FLUID NOZZLE.

NOTE	IF THE SYSTEM IS NOT USED FOR AN EXTENDED PERIOD IT IS RECOMMENDED TO BE FILLED WITH A LIGHT OIL AFTER CLEANING.

ATEX special conditions for safe use:

Pump Earthing

The pump must be earthed at all times. A resistance <1Ω when measuring with an ohm-meter at the earth point

Earth connection, Binks Part No. 0114-011798

MX1231 & MXL1231 BARE PUMP

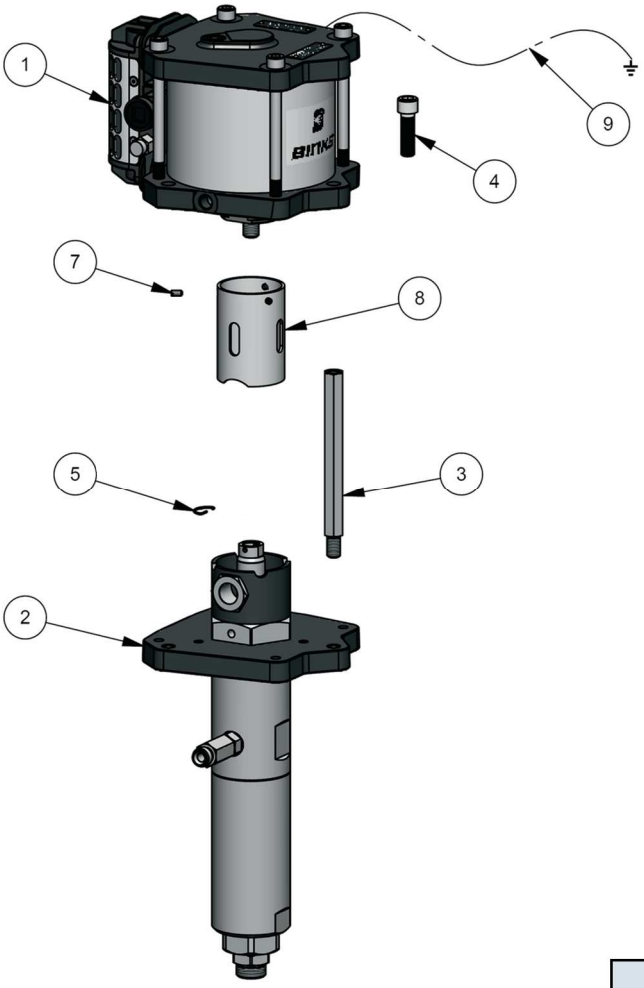

ITEM	PART NUMBER	DESCRIPTION	QUANTITY MX1231 / MXL1231			
			PL	PP	PU	UC
1	AX140S	AIR MOTOR	1	1	1	1
2	FX12PL/FXL12PL	FLUID SECTION (PTFE/LEATHER)	1	-	-	-
	FX12PP/FXL12PP	FLUID SECTION (PTFE)	-	1	-	-
	FX12PU/FXL12PU	FLUID SECTION (PTFE/UHMW)	-	-	1	-
	FX12UC/FXL12UC	FLUID SECTION (U-CUPS)	-	-	-	1
3	0115-010648	TIE ROD	3	3	3	3
4 Δ	0115-010114	SOCKET HEAD CAP SCREW	3	3	3	3
5 •	0115-010113	LOCKING CLIP	1	1	1	1
7	166001	SLOTTED SET SCREW	3	3	3	3
8	0115-010655	GUARD	1	1	1	1
9	0114-011798	GROUND WIRE	1	1	1	1
	0114-009743	SPRING WASHER	2	2	2	2
	0114-014179	SOCKET HEAD CAP SCREW	1	1	1	1

Δ Part only availble in AX140 Hardware kit: 0115-010300.

- Part only available in repair kits: 0115-010305, 0115-010307, 0115-010309, 0115-010387 and 0115-010730.

MX1231 & MXL1231 - BARE PUMP - MAINTENANCE

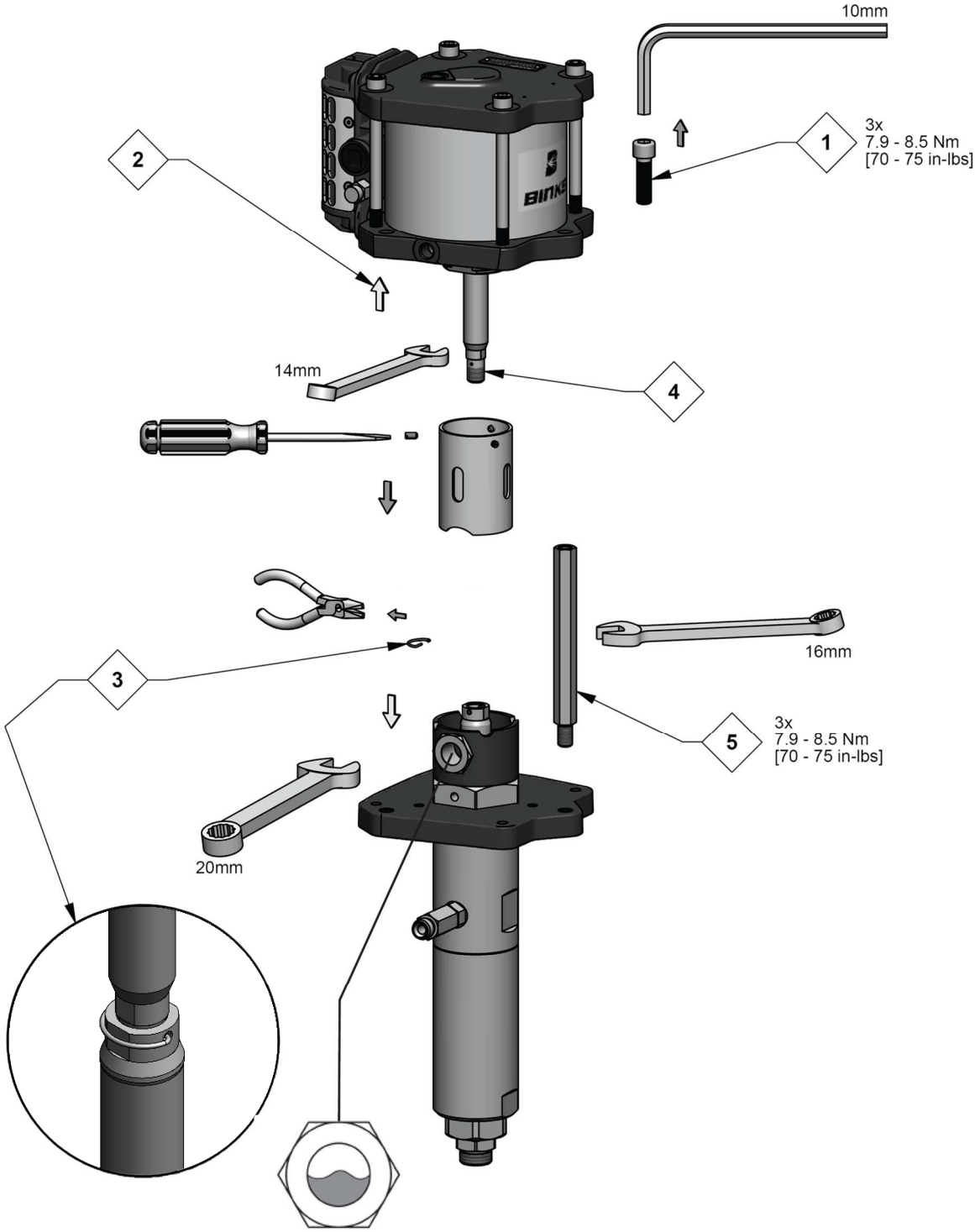

RECOMMENDED LUBRICANT LEVEL

MAINTENANCE SYMBOLS	
#	ITEM NUMBER
#	DISASSEMBLY ORDER
	(Reverse for assembly)
PG	PETROLEUM JELLY/GREASE
TS	THREAD SEALANT (PTFE tape)

MX1231 & MXL1231 - BARE PUMP - TROUBLESHOOTING

PROBLEM	CAUSE	SOLUTION
Pump will not start	No compressed air. Spray tip is blocked.	Check compressed air supply. Clean or replace the spray tip.
Erratic operation of air motor, air motor stops.	Worn poppet assemblies. Worn or dirty spool and sleeve assembly.	Replace poppet assemblies. Clean or replace the spool and sleeve assembly as necessary.
Continuous air leak from the exhaust	Worn poppet assemblies. Worn piston seal. Worn diaphragm.	Replace poppet assemblies. Replace piston seal. Replace diaphragm.
Material in solvent cup.	Worn or dirty upper packings.	Replace or clean upper packings as necessary.
Pump does not stop on the down stroke	Worn or dirty lower ball check.	Replace or clean the parts as necessary.
Pump does not stop on the up stroke	Worn or dirty upper ball check. Worn or dirty lower packings.	Replace or clean the parts as necessary.
Pump runs erratically	Blocked siphon kit. Blocked inlet filter or strainer. Low material level.	Replace or clean the siphon kit. Replace or clean inlet filter or strainer. Replace or refill material container.
Pump runs, with no output	Loose connection in between pump and siphon assembly. Stuck lower ball.	Check that all connections are tight. Replace or clean the parts as necessary.

AX140S AIR MOTOR

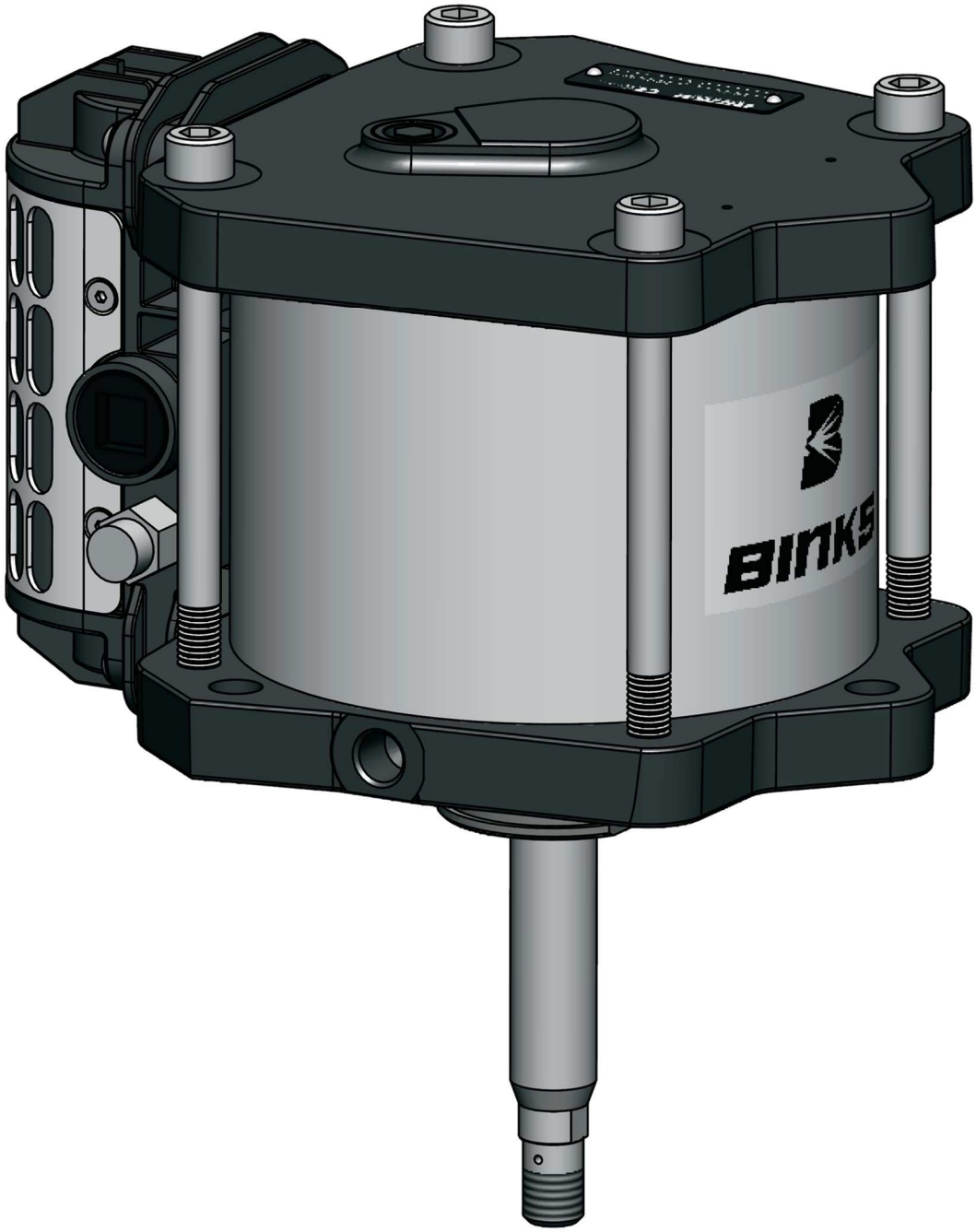

Patent 7,603,855

SPECIFICATION	
Maximum air inlet pressure:	8 bar [116 psi]
Maximum recommended continous cycle rate [cycles/min]:	20
Air inlet connection:	Ø12mm Hose
Piston Diameter:	140 mm [5.5 in]
Stroke length:	75 mm [3.0in]

AX140S AIR MOTOR

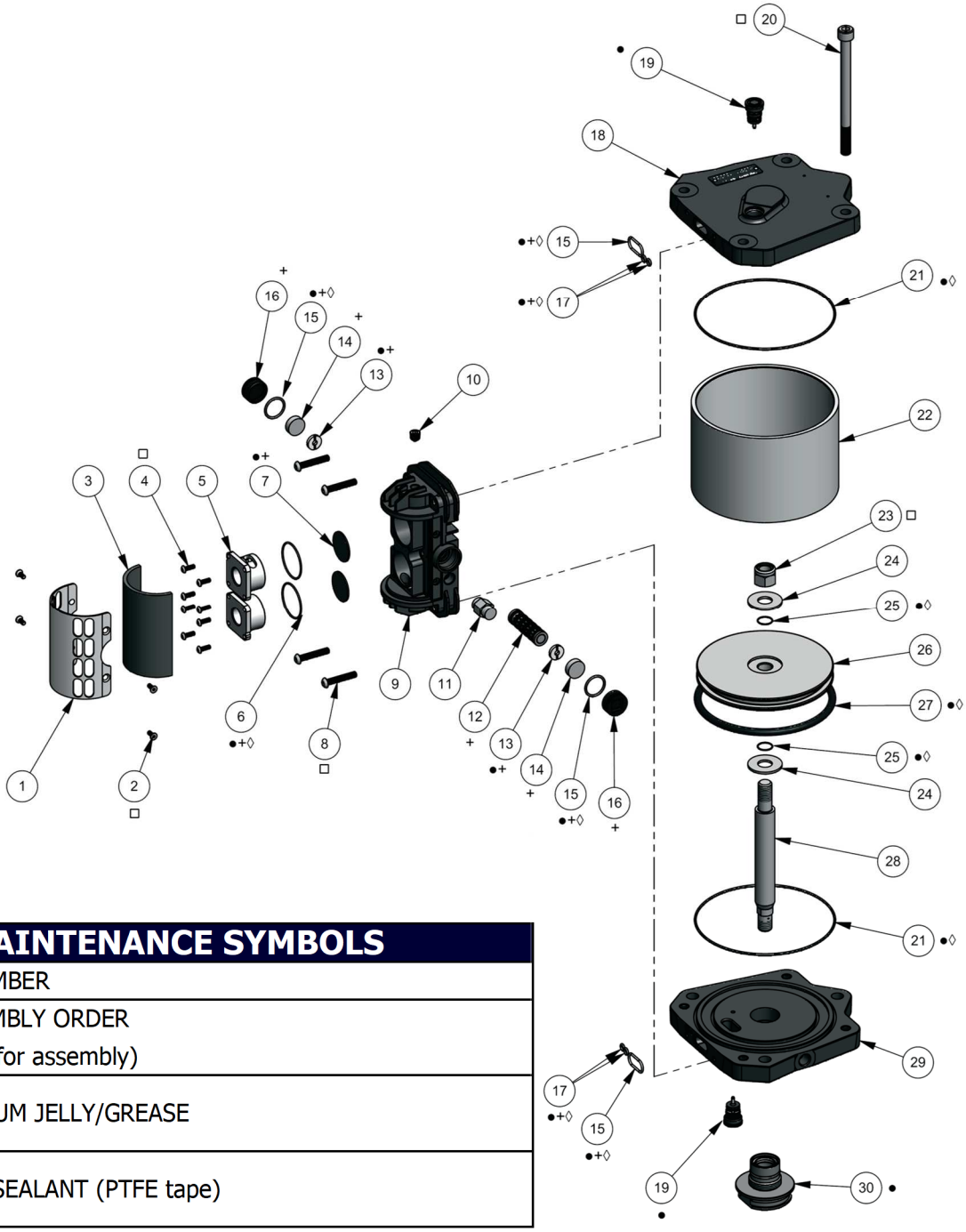

MAINTENANCE SYMBOLS	
#	ITEM NUMBER
◇#	DISASSEMBLY ORDER (Reverse for assembly)
PG	PETROLEUM JELLY/GREASE
TS	THREAD SEALANT (PTFE tape)

- • Parts are included in 0115-010301 Air Motor Repair Kit.
- \+ Parts are included in 0115-010226 Air Motor Valve Repair Kit.
- ◇ Parts are included in 0115-010302 Air Motor Seal Kit.
- □ Parts are included in 0115-010300 AX140 Hardware Kit.

AX140S AIR MOTOR

REF.		PART NUMBER	DESCRIPTION	QTY
1	Δ	0115-010023	EXHAUST COVER SCREEN	1
2	Δ□	0115-010024	FLAT HEAD COUNTER SUNK SCREW	4
3	Δ	0115-010022	EXHAUST COVER	1
4	Δ□	0115-010073	BUTTON HEAD CAP SCREW	8
5	Δ	0115-010019	QUICK EXHAUST VALVE CAGE	2
6	Δ●+◇	0115-010021	O-RING	2
7	Δ●+	0115-010020	DIAPHRAGM	2
8	□	0115-010026	BUTTON HEAD CAP SCREW	4
9	Δ	0115-010097	VALVE BLOCK.	1
10	Δ□	0115-010107	PIPE PLUG	1
11	Δ	0114-014774	SAFETY VALVE	1
12	Δ+	0115-010015	SPOOL AND SLEEVE ASSEMBLY	1
13	Δ●+	0115-010016	BUMPER	2
14	Δ+	0115-010017	MAGNET	2
15	Δ●+◇	0115-010049	O-RING	4
16	Δ+	0115-010018	VALVE BLOCK END CAP	2
17	●+◇	0115-010051	O-RING	4
18		0115-010117	UPPER END CAP MACHINING	1
19	●	0115-010037	POPPET ASSEMBLY	2
20	□	0115-010124	SOCKET HEAD CAP SCREW	4
21	●◊	0115-010133	O-RING	2
22		0115-010116	CYLINDER	1
23	□	0115-010127	LOCKNUT	1
24		0115-010131	WASHER	2
25	●◊	0115-010132	O-RING	2
26		0115-010128	PISTON	1
27	●◇	0115-010129	O-RING	1
28		0115-010130	MOTOR ROD	1
29		0115-010119	LOWER END CAP MACHINING	2
30	●	0115-010658	MOTOR ROD CARTRIDGE ASSEMBLY	1
31		0115-010181	90° SWIVEL ELBOW, Ø12mm TUBE - G3/8" MALE (not shown)	1

Δ Items available separately or as a complete assembly: 0115-010660.

● Parts are included in 0115-010301 Air Motor Repair Kit.

+ Parts are included in 0115-010226 Air Motor Valve Repair Kit.

◇ Parts are included in 0115-010302 Air Motor Seal Kit.

□ Parts are included in 0115-010300 AX140 Hardware Kit.

AX140S AIR MOTOR - MAINTENANCE

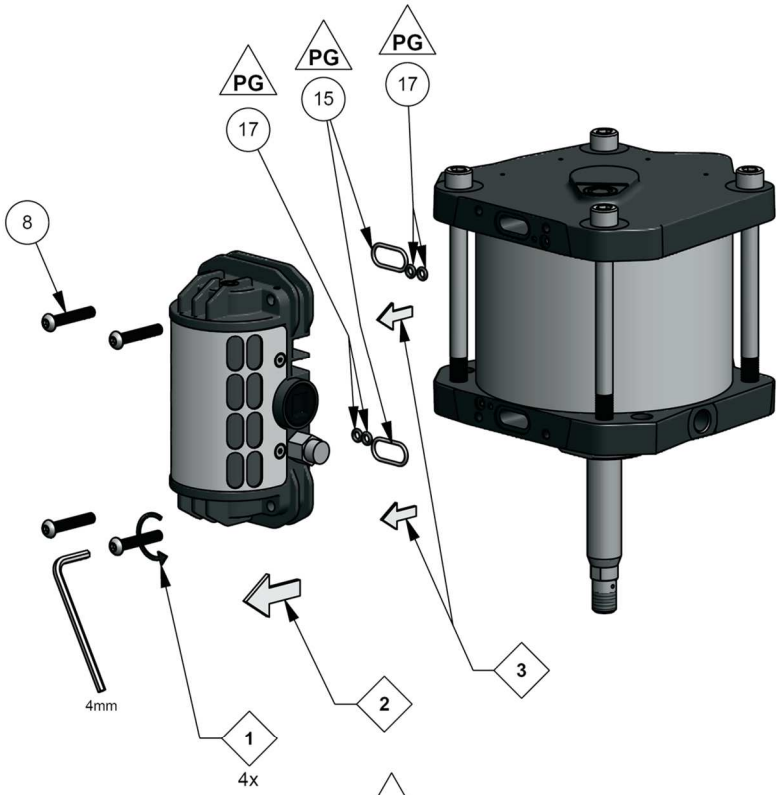

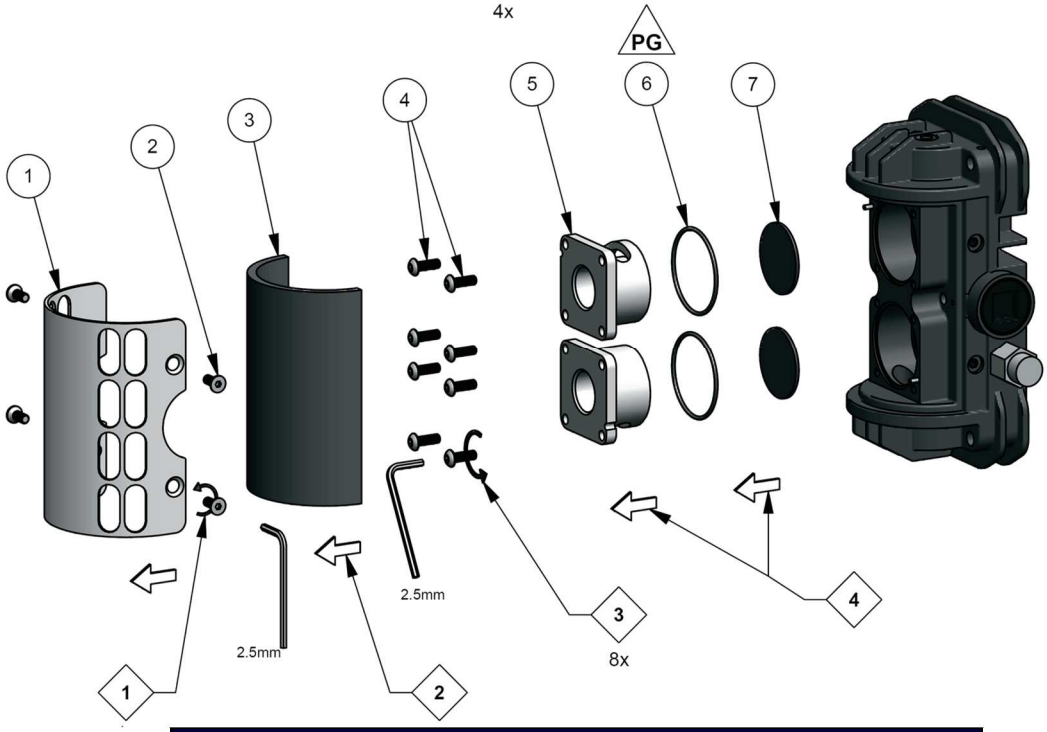

MAINTENANCE SYMBOLS	
#	ITEM NUMBER
#	DISASSEMBLY ORDER *(Reverse for assembly)*
PG	PETROLEUM JELLY/GREASE
TS	THREAD SEALANT (PTFE tape)

AX140S AIR MOTOR - MAINTENANCE

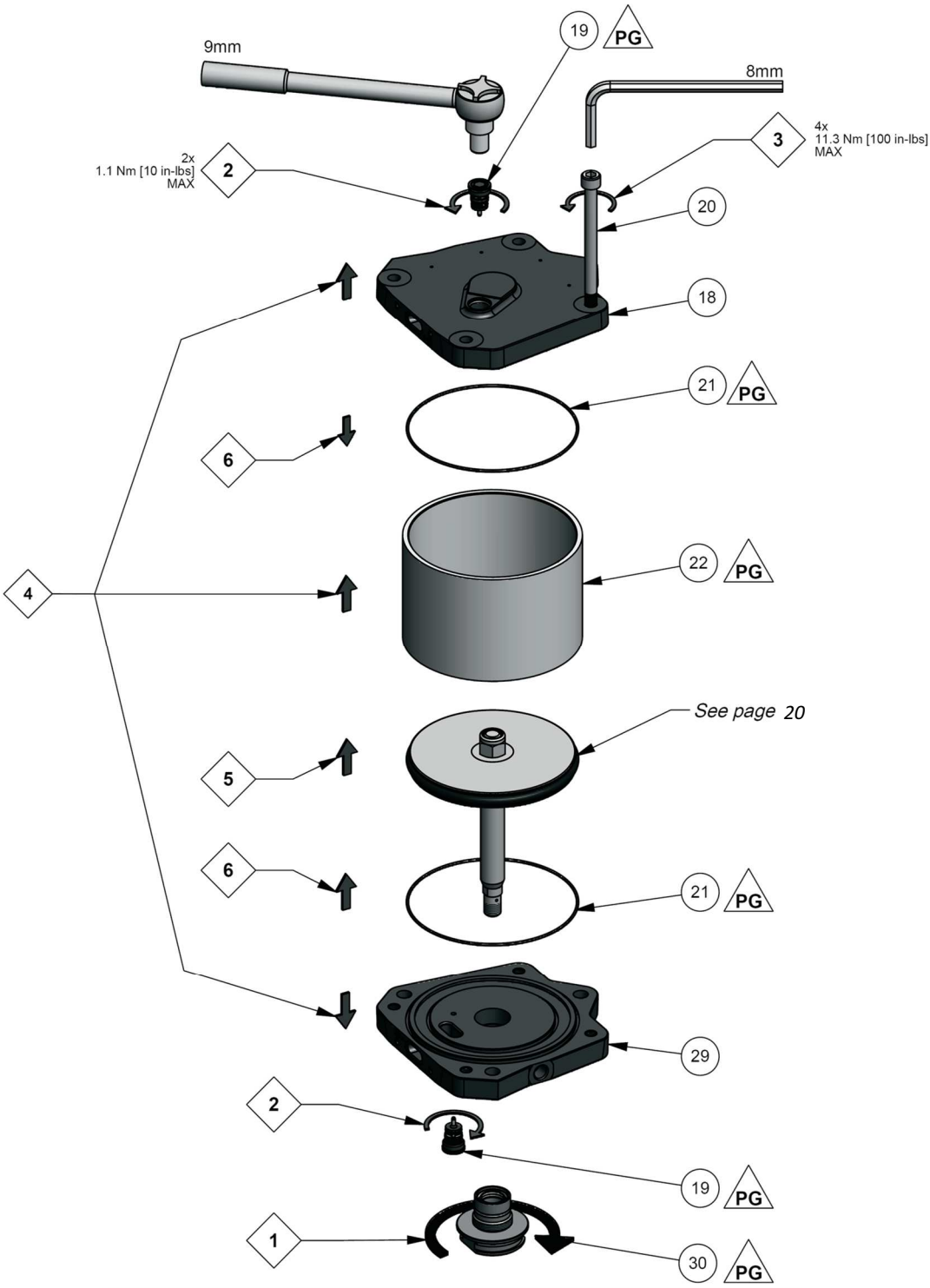

MAINTENANCE SYMBOLS	
#	ITEM NUMBER
#	DISASSEMBLY ORDER *(Reverse for assembly)*
PG	PETROLEUM JELLY/GREASE
TS	THREAD SEALANT (PTFE tape)

AX140S AIR MOTOR - MAINTENANCE

MAINTENANCE SYMBOLS	
#	ITEM NUMBER
#	DISASSEMBLY ORDER (Reverse for assembly)
PG	PETROLEUM JELLY/GREASE
TS	THREAD SEALANT (PTFE tape)

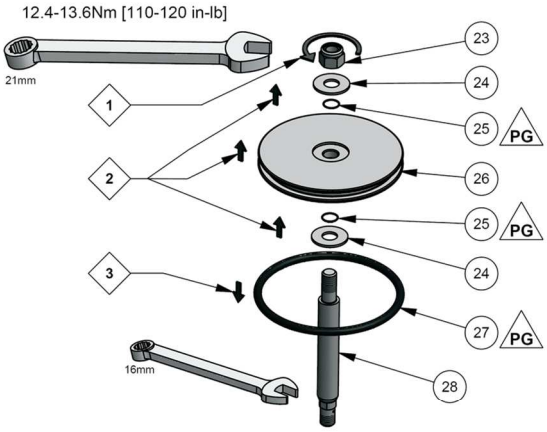

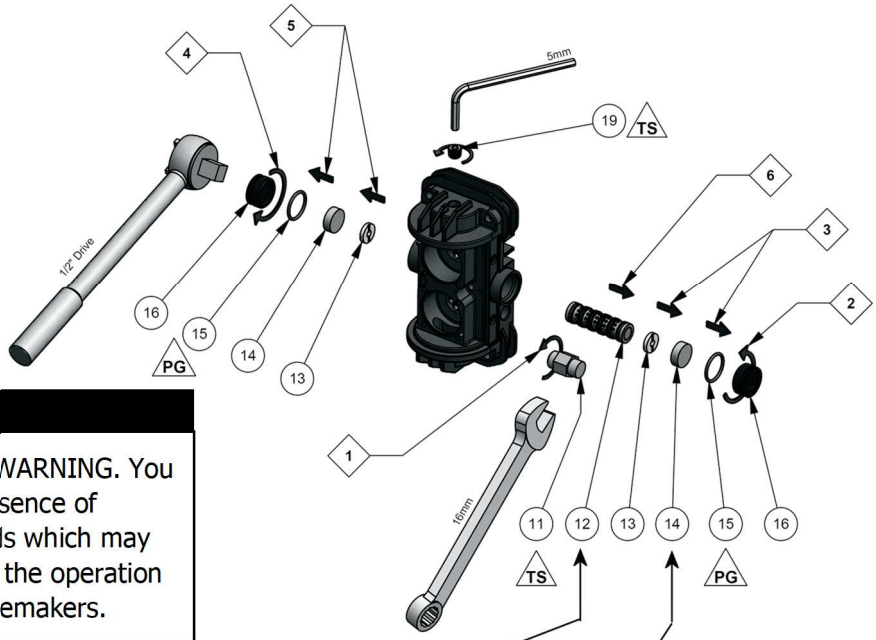

WARNING	
	PACEMAKER WARNING. You are in the presence of magnetic fields which may interfere with the operation of certain pacemakers.

NOTE	CAUTION
Spool and sleeve assembly (12) is a matched set and cannot be interchanged with other spool and sleeve assemblies	Take care when handling the magnets (13). Avoid getting magnets in close proximity to each other. Injury or damage to magnets may result.

AX140S AIR MOTOR - TROUBLESHOOTING

PROBLEM	CAUSE	SOLUTION
Pump will not start	No compressed air. System is blocked.	Check compressed air supply. Clear the blockage.
Erratic operation of air motor, air motor stops.	Worn poppet assemblies. Worn or dirty spool and sleeve assembly.	Replace poppet assemblies. Clean or replace the spool and sleeve assembly as necessary.
Continuous air leak from the exhaust	Worn poppet assemblies. Worn piston seal. Worn diaphragm.	Replace poppet assemblies. Replace piston seal. Replace diaphragm.

NOTES

FX12 & FXL12 - FLUID SECTION

Models: FX12‡‡ & FXL12‡‡, ‡‡=PL (PTFE/Leather), PP (PTFE), PU (PTFE/UHMWPE), UC (U-Cups), UCU (U-Cups/UHMWPE)

SPECIFICATIONS	
Maximum fluid pressure:	248 bar
Displacement per cycle:	72 cc
Output @ 60 cycles / min:	4.3 l/m [1.1 gal/m]
Fluid inlet size:	3/4" NPS(m)
Fluid outlet size:	3/8" BSP(m) & 3/8" NPS(m)
Weight:	6.4 kg [14.1 lbs]
Wetted parts materials of construction:	Stainless Steel,
	Tungsten Carbide,
	PTFE,
	Polyethylene, Leather, Ceramic

FX12 & FXL12 - FLUID SECTION (Chevron seals)

Models: FX12‡‡ & FXL12‡‡, ‡‡=PL (PTFE/Leather), PP (PTFE), PU (PTFE/UHMWPE).

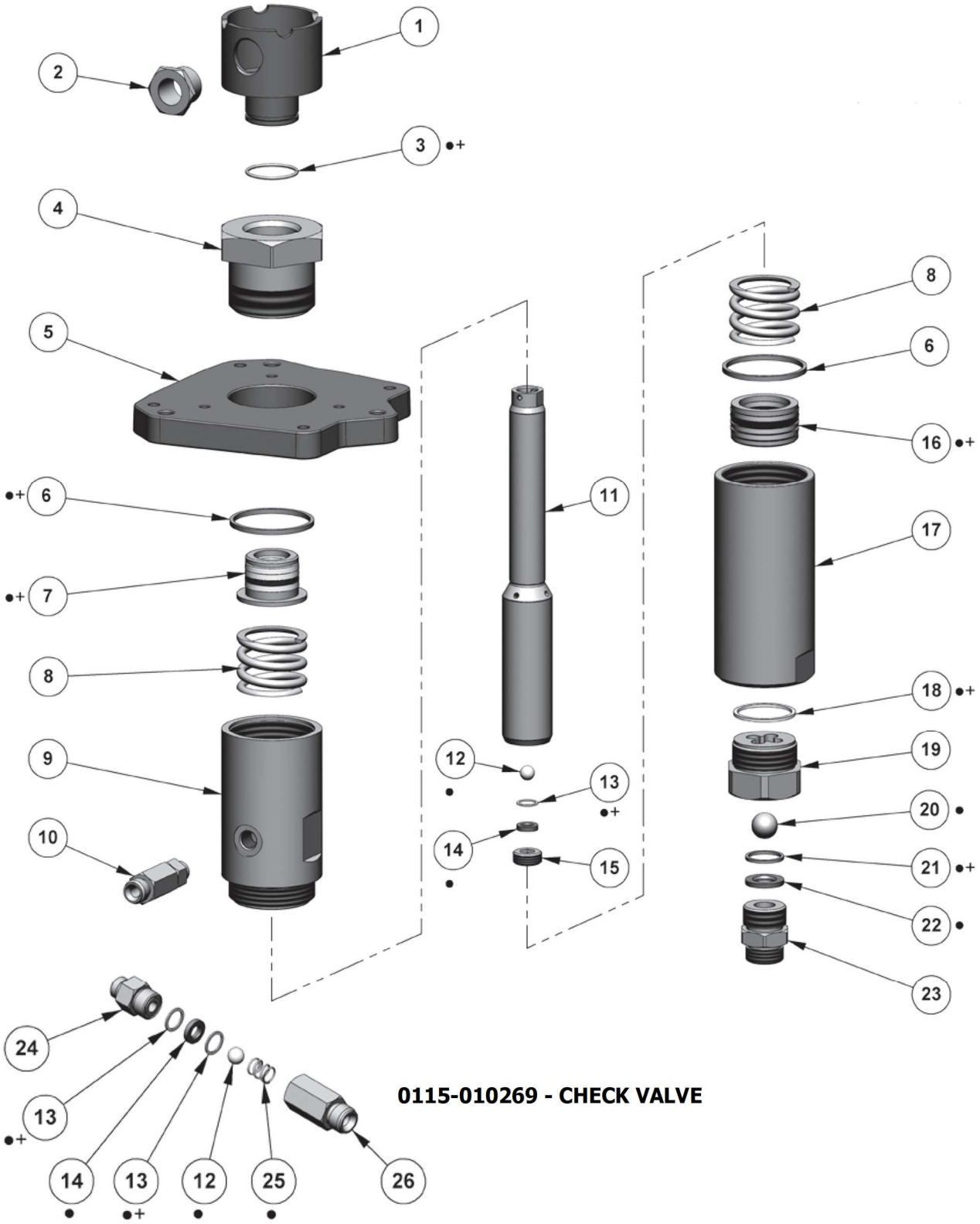

• Parts are included in Repair Kits

+ Parts are included in Seal Kits

FX12 & FXL12 - FLUID SECTION (Chevron seals)

Models: FX12‡‡ & FXL12‡‡, ‡‡=PL (PTFE/Leather), PP (PTFE), PU (PTFE/UHMWPE).

ITEM	PART NUMBER	DESCRIPTION	QUANTITY FX12 & FXL12		
			PL	PP	PU
1	0115-010232	SOLVENT CUP	1	1	1
2	0115-010294	SIGHT GLASS	1	1	1
3 •+	0115-010231	O-RING	1	1	1
4	0115-010141	FX12 UPPER PACKING RETAINER	1	1	1
5	0115-010205	PUMP ADAPTER PLATE	1	1	1
6 •+	0115-010143	PUMP TUBE SEAL	2	2	2
7 •+	0115-010261	UPPER PACKING SET (PTFE/LEATHER)	1	-	-
	0115-010263	UPPER PACKING SET (PTFE)	-	1	-
	0115-010265	UPPER PACKING SET (PTFE/UHMW)	-	-	1
8	0115-010152	PACKING SPRING	2	2	2
9	0115-010137	UPPER PUMP TUBE	1	1	1
10	0115-010269	FX12 CHECK VALVE ASSEMBLY	1	1	1
11	0115-010142	FX12 PUMP ROD	1	1	1
12 •	0114-014022	10mm UPPER BALL	2	2	2
13 •+	0115-010144	UPPER SEAT SEAL	3	3	3
14 •	0115-010145	UPPER SEAT	2	2	2
15	0115-010146	FX12 UPPER SEAT RETAINER	1	1	1
16 •+	0115-010262	LOWER PACKING SET (PTFE/LEATHER)	1	-	-
	0115-010264	LOWER PACKING SET(PTFE)	-	1	-
	0115-010266	LOWER PACKING SET (PTFE/UHMW)	-	-	1
17	0115-010138	LOWER PUMP TUBE	1	1	1
18 •+	0115-010140	SEAL	1	1	1
19	0115-010139	LOWER BALL CAGE	1	1	1
20 •	0114-014025	18mm LOWER BALL	1	1	1
21 •+	0115-010147	LOWER SEAT SEAL	1	1	1
22 •	0115-010148	LOWER SEAT	1	1	1
23	0115-010149	INLET 3/4" NPS(m) FX12/FXL12	1	1	1
24	0115-010258	FLUID OUTLET FITTING	1	1	1
25 •	0115-010270	CHECK VALVE SPRING	1	1	1
26	0115-010271	CHECK VALVE HOUSING	1	1	1

	FX*12PL	FX*12PP	FX*12PU
• Parts are included in Repair Kits	0115-010307	0115-010309	0115-010387
+ Parts are included in Seal Kits	0115-010306	0115-010308	0115-010303

FX12 & FXL12 - Fluid Section (U-cup seals)

Models: FX12UC & FXL12UC

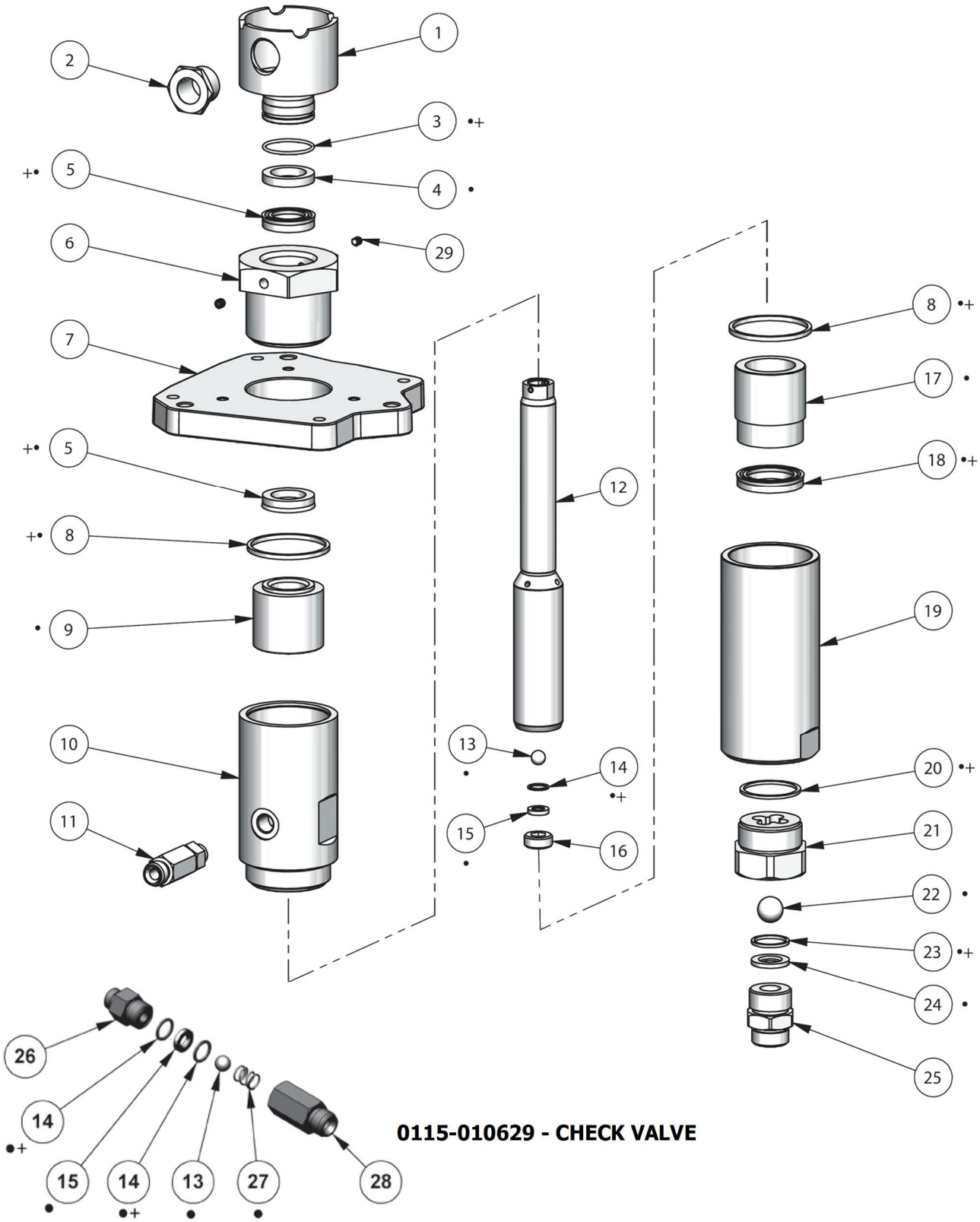

• Parts are included in 0115-010305 Repair Kit.

+ Parts are included in 0115-010304 Seal Kit.

FX12 & FXL12 - Fluid Section (U-cup seals)

Models: FX12UC & FXL12UC

ITEM	PART NUMBER	DESCRIPTION	QUANTITY
1	0115-010232	SOLVENT CUP	1
2	0115-010294	SIGHT GLASS	1
3 •+	0115-010231	FX12 O-RING	1
4 •	0115-010230	SPACER	1
5 •+	0115-010161	UPPER U-CUP SEAL	2
6	0115-010229	UPPER U-CUP RETAINER	1
7	0115-010205	PUMP ADAPTER PLATE	1
8 •+	0115-010143	PUMP TUBE SEAL	2
9 •	0115-010162	UPPER U-CUP SPACER	1
10	0115-010137	UPPER PUMP TUBE	1
11	0115-010269	CHECK VALVE ASSEMBLY	1
12	0115-010142	FX12 PUMP ROD	1
13 •	0114-014022	10mm UPPER BALL	2
14 •+	0115-010144	FX12 UPPER SEAT SEAL	3
15 •	0115-010145	UPPER SEAT	2
16	0115-010146	FX12 UPPER SEAT RETAINER	1
17 •	0115-010164	LOWER U-CUP SPACER	1
18 •+	0115-010163	LOWER U-CUP SEAL	1
19	0115-010138	LOWER PUMP TUBE	1
20 •+	0115-010140	LOWER BALL CAGE SEAL	1
21	0115-010139	LOWER BALL CAGE	1
22 •	0114-014025	18mm LOWER BALL	1
23 •+	0115-010147	LOWER SEAT SEAL	1
24 •	0115-010148	LOWER SEAT	1
25	0115-010149	INLET 3/4" NPS(m) FX12/FXL12	1
26	0115-010258	FLUID OUTLET FITTING	1
27 •	0115-010270	CHECK VALVE SPRING	1
28	0115-010271	CHECK VALVE HOUSING	1
29	0114-018251	SET SCREW	2

• Parts are included in Repair Kit	0115-010305
+ Parts are included in Seal Kit	0115-010304

FX12 & FXL12 - FLUID SECTION (Mixed seals)

Models: FX12UCU & FXL12UCU, UCU = (U-Cup/UHMWPE).

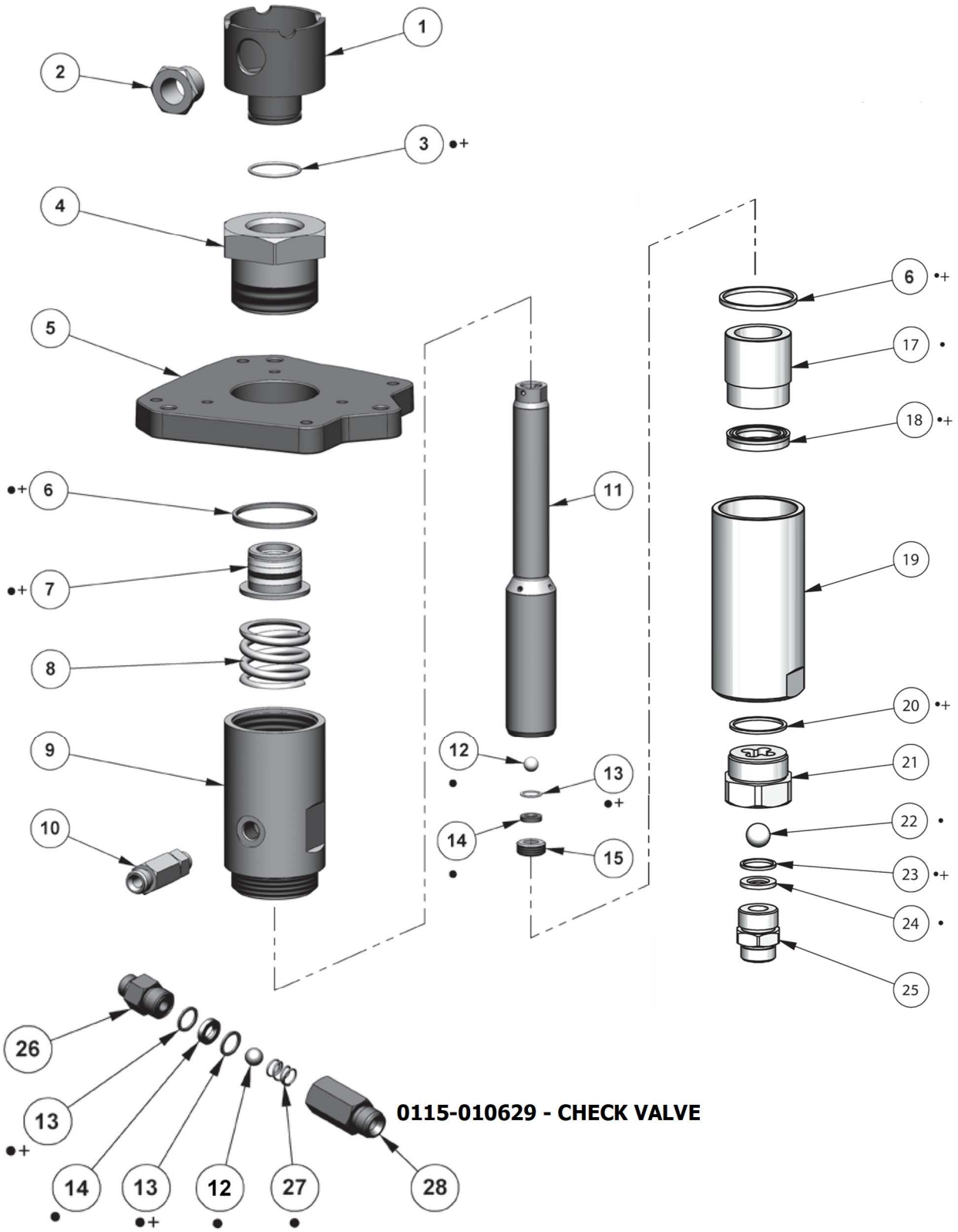

• Parts are included in Repair Kits

+ Parts are included in Seal Kits

FX12 & FXL12 - FLUID SECTION (Mixed seals)

Models: FX12UCU & FXL12UCU, UCU = (U-Cup/UHMWPE).

ITEM		PART NUMBER	DESCRIPTION	QUANTITY
1		0115-010232	SOLVENT CUP	1
2		0115-010294	SIGHT GLASS	1
3	•+	0115-010231	O-RING	1
4		0115-010141	FX12 UPPER PACKING RETAINER	1
5		0115-010205	PUMP ADAPTER PLATE	1
6	•+	0115-010143	PUMP TUBE SEAL	2
7		0115-010729	UPPER PACKING SET (UHMW)	1
8		0115-010152	PACKING SPRING	1
9		0115-010137	UPPER PUMP TUBE	1
10		0115-010269	FX12 CHECK VALVE ASSEMBLY	1
11		0115-010142	FX12 PUMP ROD	1
12	•	0114-014022	10mm UPPER BALL	2
13	•+	0115-010144	UPPER SEAT SEAL	3
14	•	0115-010145	UPPER SEAT	2
15		0115-010146	FX12 UPPER SEAT RETAINER	1
16		-	-	-
17	•	0115-010164	LOWER U-CUP SPACER	1
18	•+	0115-010163	LOWER U-CUP SEAL	1
19		0115-010138	LOWER PUMP TUBE	1
20	•+	0115-010140	LOWER BALL CAGE SEAL	1
21		0115-010139	LOWER BALL CAGE	1
22	•	0114-014025	18mm LOWER BALL	1
23	•+	0115-010147	LOWER SEAT SEAL	1
24	•	0115-010148	LOWER SEAT	1
25		0115-010149	INLET 3/4" NPS(m) FX12/FXL12	1
26		0115-010258	FLUID OUTLET FITTING	1
27	•	0115-010270	CHECK VALVE SPRING	1
28		0115-010271	CHECK VALVE HOUSING	1

• Parts are included in Repair Kits	0115-010730
+ Parts are included in Seal Kits	0115-010731

FX12 & FXL12 - FLUID SECTION (Chevron seals) - MAINTENANCE

Models: FX12‡‡ & FXL12‡‡, ‡‡=PL (PTFE/Leather), PP (PTFE), PU (PTFE/UHMWPE).

MAINTENANCE SYMBOLS	
#	MAINTENANCE ORDER *(Reverse for assembly)*
PG	PETROLEUM JELLY
TS	THREAD SEALANT (PTFE tape)

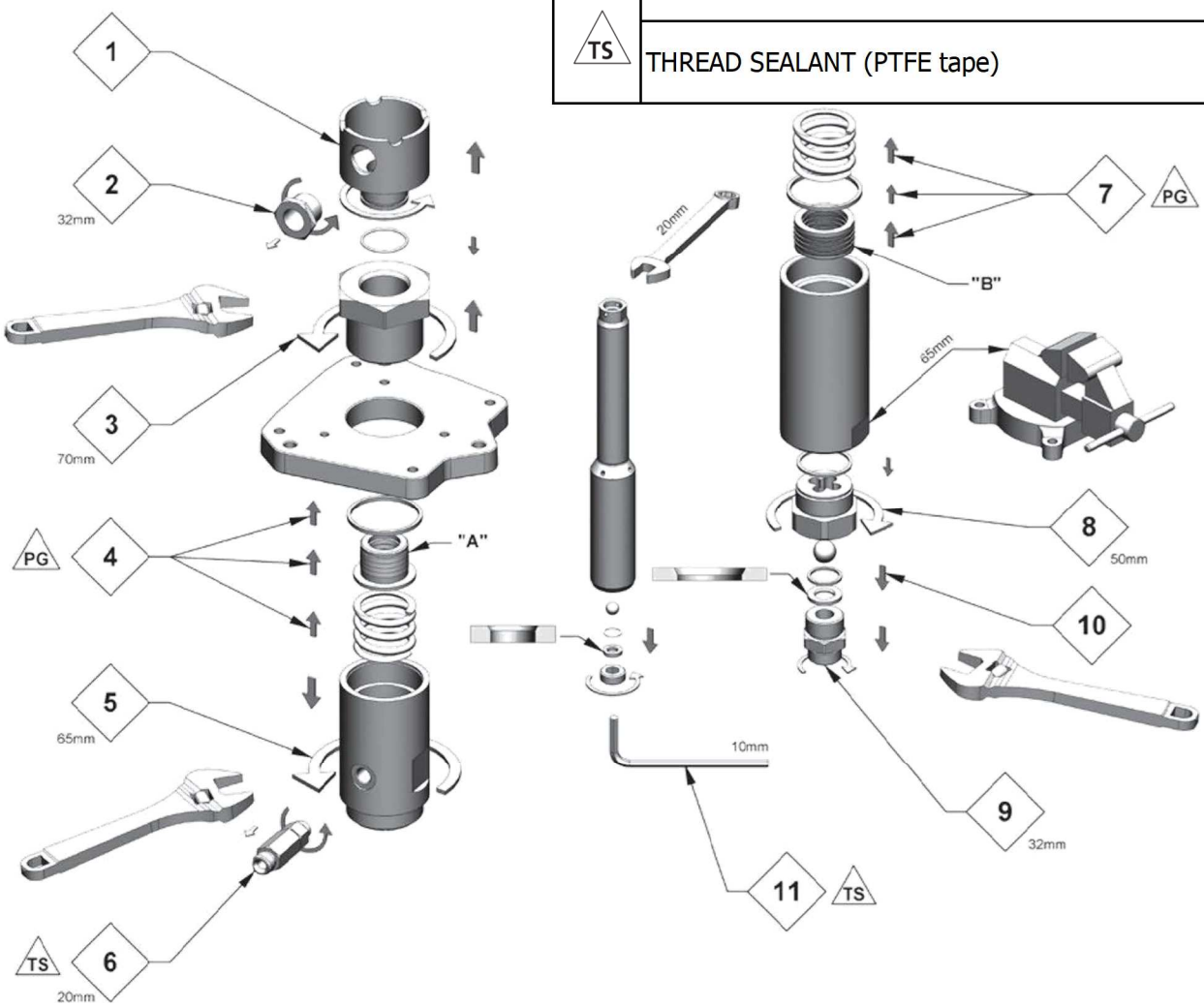

FX12 & FXL12 - SEAL ORIENTATION

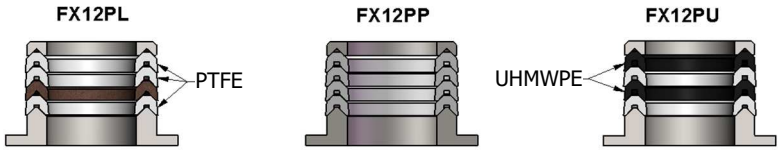

DETAIL "A" UPPER PACKINGS

DETAIL "B" LOWER PACKINGS

FX12 - FLUID SECTION (U-CUP Seals) - MAINTENANCE

MODEL: FX12UC & FXL12UC

MAINTENANCE SYMBOLS	
#	MAINTENANCE ORDER *(Reverse for assembly)*
PG	PETROLEUM JELLY
TS	THREAD SEALANT (PTFE tape)

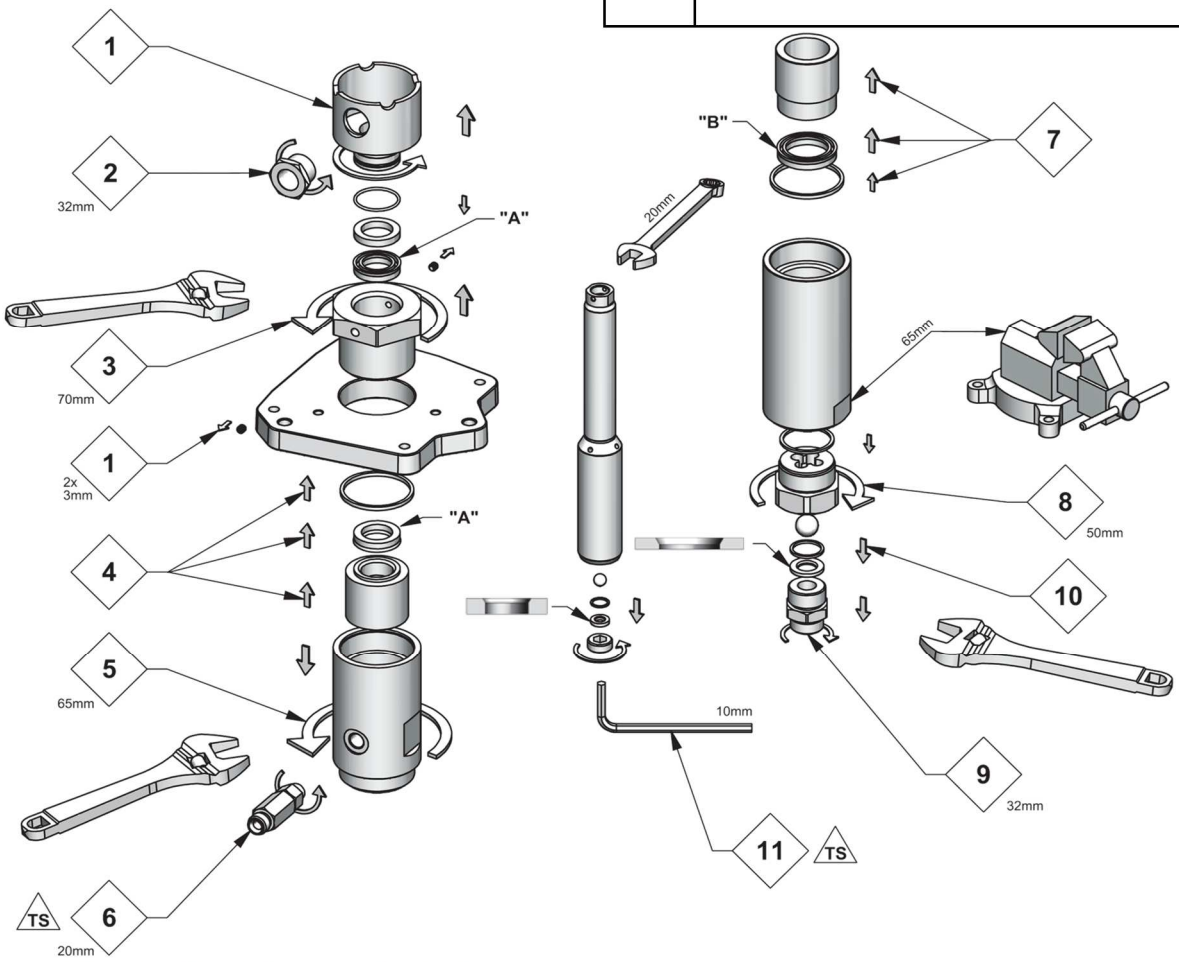

FX12 AND FXL12 - SEAL ORIENTATION

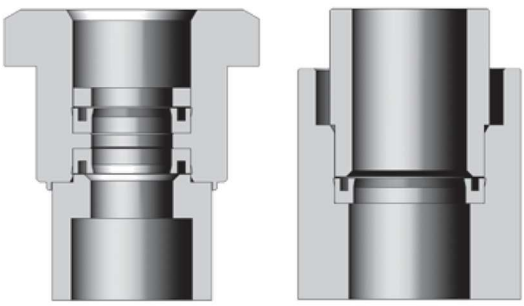

DETAIL "A" UPPER SEAL DETAIL "B" LOWER SEAL

FX12 AND FXL12 - FLUID SECTION (Mixed seals)

Models: FX12UCU & FXL12UCU, UCU = (U-Cup/UHMWPE).

MAINTENANCE SYMBOLS	
#	MAINTENANCE ORDER *(Reverse for assembly)*
PG	PETROLEUM JELLY
TS	THREAD SEALANT (PTFE tape)

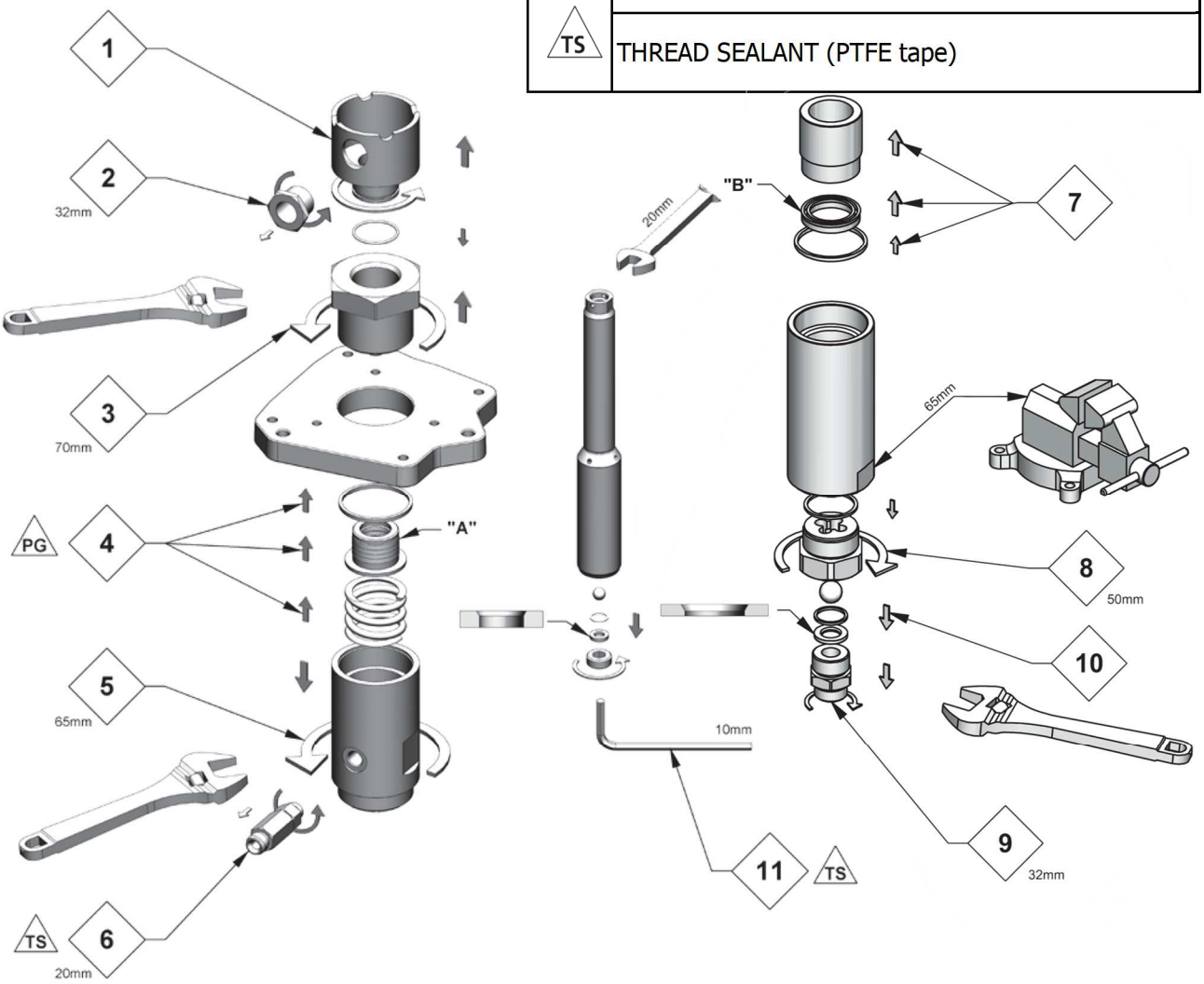

FX12 AND FXL12 - SEAL ORIENTATION

DETAIL "A" UPPER PACKINGS

FX12UCU / FXL12UCU

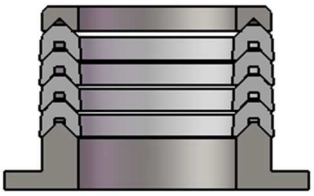

DETAIL "B" LOWER SEAL

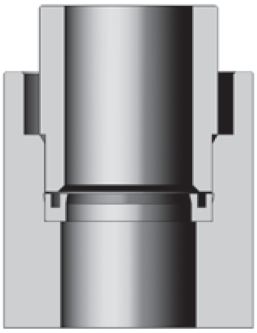

FX12 - FLUID PUMP ASSEMBLIES - TROUBLESHOOTING

PROBLEM	CAUSE	SOLUTION
Material in solvent cup	Worn or dirty upper packings.	Replace or clean upper packings as necessary.
Pump does not stop on the down stroke	Worn or dirty lower ball check.	Replace or clean the parts as necessary.
Pump does not stop on the up stroke	Worn or dirty upper ball check. Worn or dirty lower packings.	Replace or clean the parts as necessary.
Pump runs erratically	Blocked material siphon kit. Blocked inlet filter or strainer. Low material level.	Replace or clean the siphon kit. Replace or clean inlet filter or strainer. Replace or refill material container.
Pump runs, with no output	Loose connection in between pump and siphon assembly. Stuck lower ball.	Check that all connections are tight. Replace or clean the parts as necessary.

Packing Recommendation

Packing Material	Recommendation
PU (PTFE & UHMW)	Most materials
PL (PTFE & Leather)	High temperature applications
PP (PTFE)	UV and acid based materials
UC (U-Cups)	Low friction applications
UCU (U-Cup/UHMWPE).	Low friction applications

MX1231 & MXL1231 - CART MOUNTED PUMP

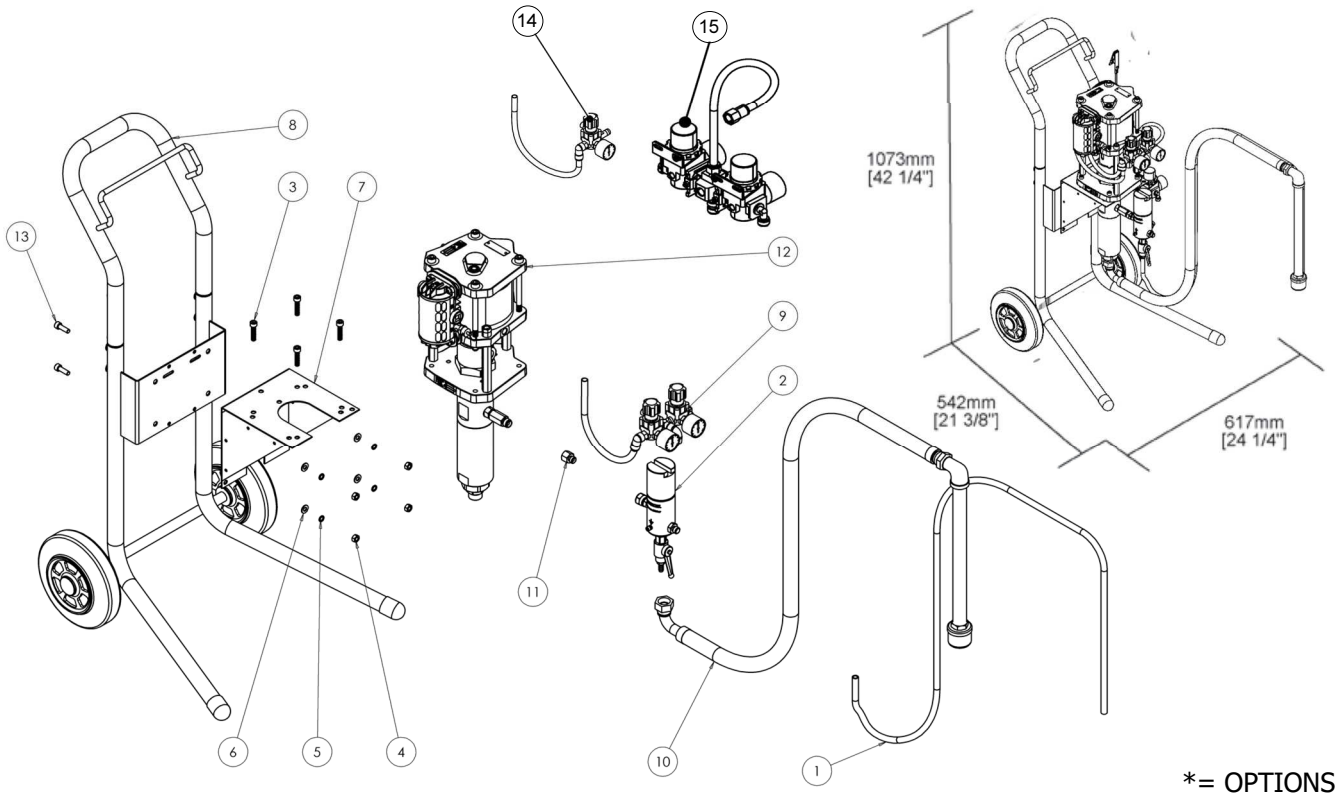

*= OPTIONS

ITEM	PART NUMBER	DESCRIPTION	QTY	
			MX	MXL
1	0110-009103	CONDUCTIVE NYLON HOSE	1*	
2	0110-009130	HP FILTER (100 mesh)	1*	
	0110-009130-2	HP FILTER (100 mesh) (2 GUNS)	1*	
3	0115-010001	M8x35 SCREW	4	
4	0115-010030	M8 HEX NUT	4	
5	0115-010031	M8 LOCKWASHER	4	
6	0115-010035	M8 PLAIN WASHER	4	
7	0115-010179	WALL BRACKET	1	
8	0115-010186	CART	1	
9	0115-010180	AIR CONTROL 2 REGULATORS & VALVE (1 GUN & PUMP)	1	-
	0115-010664	AIR CONTROL 2 REGULATORS (1 GUN & PUMP)	-	1
10	0115-010738	SUCTION HOSE (15 mesh)	1	
11	0115-010705	3/8"F - 1/4"M OUTLET FITTING	1*	
12	MX1231**	MX1231** BARE PUMP	1	-
	MXL1231**	MXL1231** BARE PUMP	-	1
13	0115-010227	M8x25 SCREW	1	
14	0115-010708	AIR CONTROL 1 REGULATORS (PUMP ONLY)	1*	
15	0115-010732	AIR CONTROL 2 REGULATORS (2 GUNS - USE WITH ITEM 14)	1*	

MX1231 & MXL1231 - WALL MOUNTED PUMP

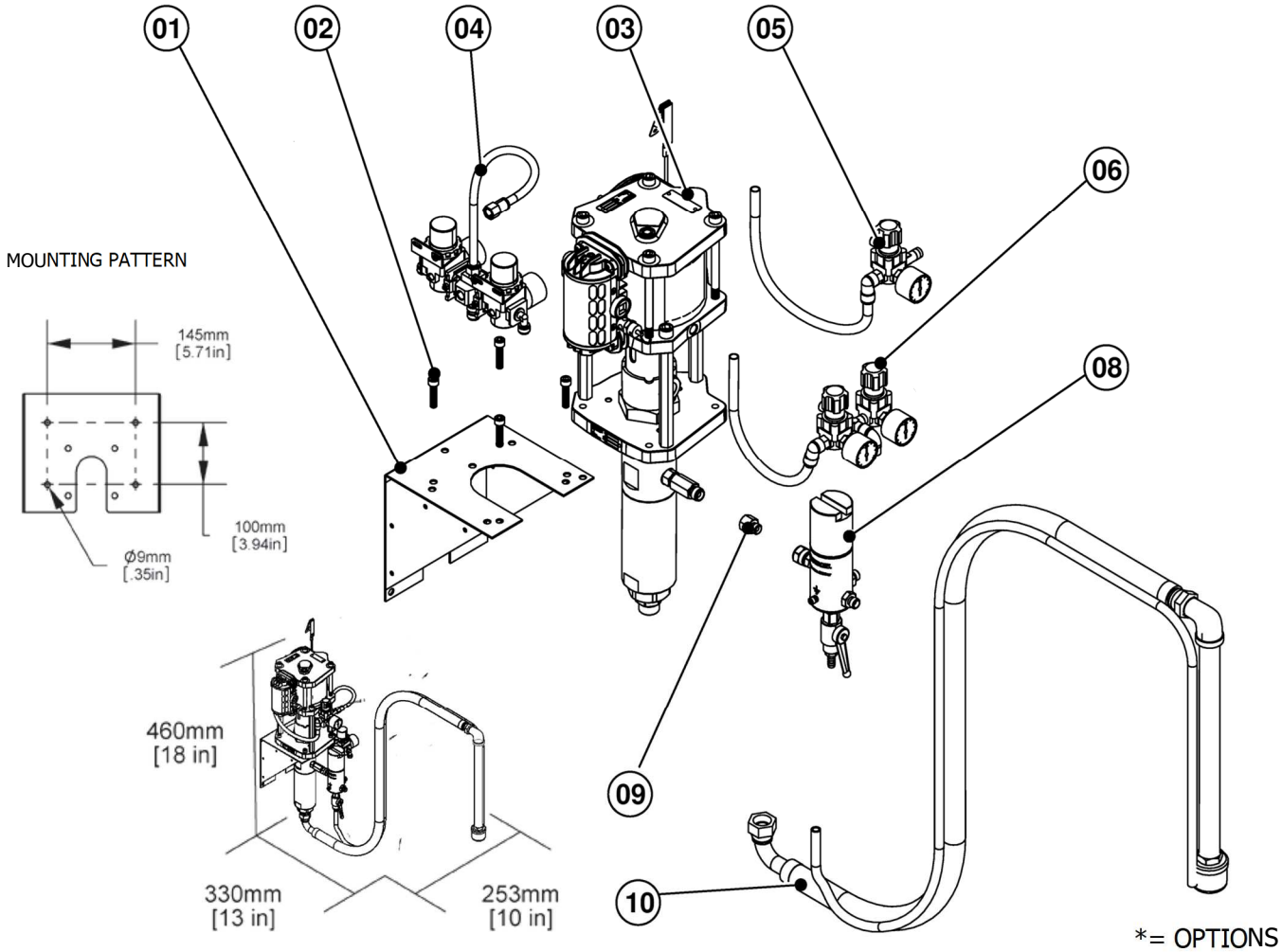

*= OPTIONS

ITEM	PART NUMBER	DESCRIPTION	QTY	
			MX	MXL
1	0115-010179	WALL BRACKET	1	
2	0115-010001	SCREW	4	
3	MX1231XX	MX1231 BARE PUMP	1	-
	MXL1231XX	MXL1231 BARE PUMP	-	1
4	0115-010732	AIR CONTROL 2 REGULATORS (2 GUNS - USE WITH ITEM 5)	1*	
5	0115-010708	AIR CONTROL 1 REGULATORS (PUMP ONLY)	1*	
6	0115-010180	AIR CONTROL 2 REGULATORS & VALVE	1	-
	0115-010664	AIR CONTROL 2 REGULATORS	-	1*
8	0110-009130	HP FILTER (100 mesh)	1*	
	0110-009130-2	HP FILTER (100 mesh) (2 GUNS)	1*	
9	0115-010705	3/8"F - 1/4"M MX1231 & MXL1231	1*	
10	0115-010738	3/4" SUCTION HOSE (15 mesh)	1	
	0110-009103	CONDUCTIVE NYLON HOSE	1*	

ACCESSORIES

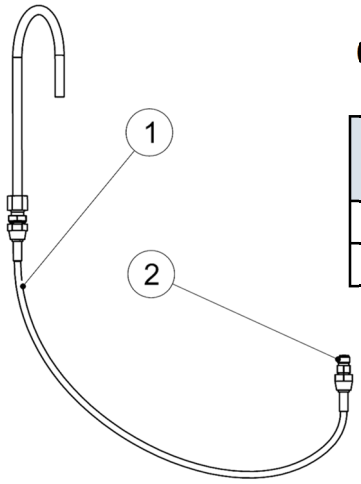

0114-009629 - 1/4" RETURN HOSE

ITEM	PART NO.	DESCRIPTION	QTY
1	0115-010695	DUMP HOSE & TUBE	1
2	0114-016059	1/4" FITTING	1

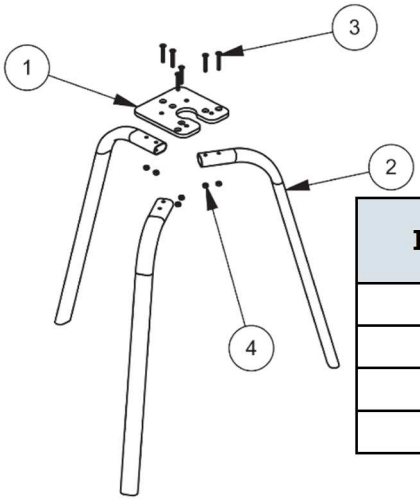

0115-010100 - TRIPOD

ITEM	PART NO.	DESCRIPTION	QTY
1	0115-010101	MOUNTING PLATE	1
2	0115-010210	TRIPOD LEG	3
3	0115-010212	FLAT HEAD SCREW	6
4	0115-010211	LOCKING NUT	6

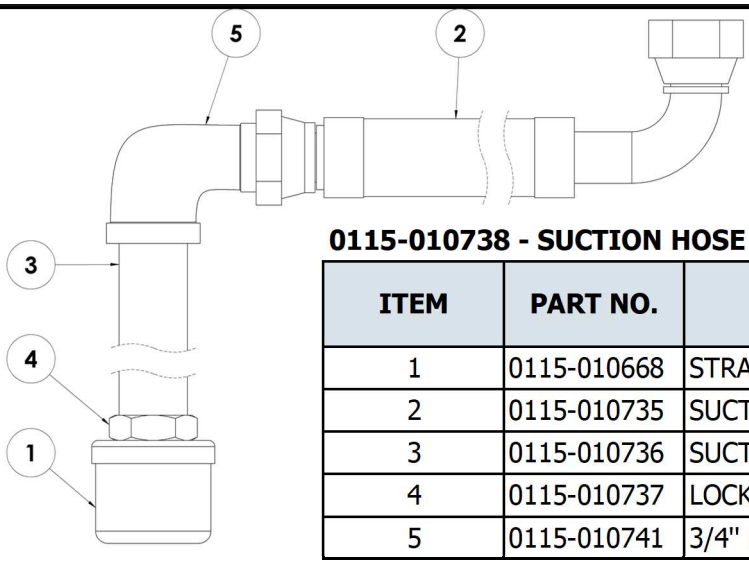

0115-010738 - SUCTION HOSE (MX)

ITEM	PART NO.	DESCRIPTION	QTY
1	0115-010668	STRAINER 15 MESH	1
2	0115-010735	SUCTION HOSE (MX)	1
3	0115-010736	SUCTION TUBE	1
4	0115-010737	LOCKING NUT	1
5	0115-010741	3/4" ELBOW	1

ACCESSORIES

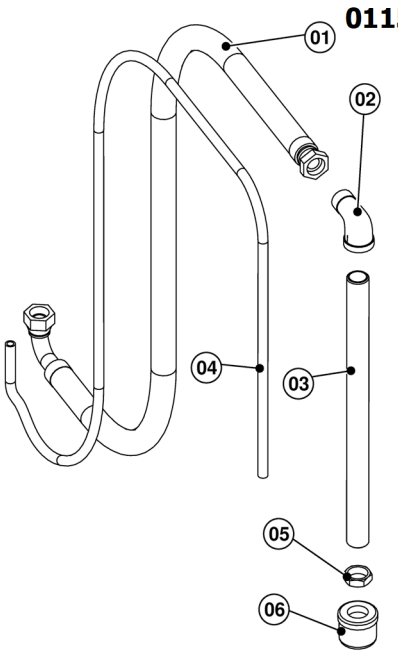

0115-010742 - 3/4" SUCTION HOSE (MXL)

ITEM	PART NO.	DESCRIPTION	QTY
1	0115-010735	SUCTION HOSE (MXL)	1
2	0115-010741	ELBOW	1
3	0115-010736	SUCTION TUBE	1
4	0110-009103	NYLON TUBE	2m
5	0115-010737	NUT	1
6	0115-010668	STRAINER 15 MESH	1

0115-010670 - SUCTION TUBE (MX)

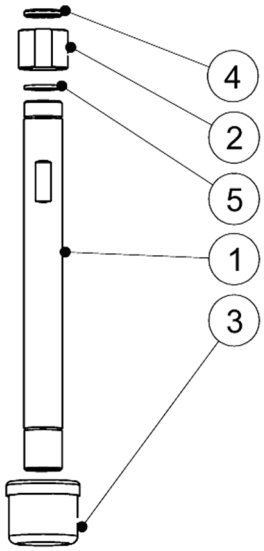

ITEM	PART NO.	DESCRIPTION	QTY
1	0115-010105	SUCTION TUBE	1
2	0115-010104	ADAPTER	1
3	0115-010668	3/4" STRAINER 15 MESH	1
4	0115-010693	SEAL	1
5	0114-013834	SEAL	1

ACCESSORIES

0115-010664 - AIR CONTROL 2 REGULATORS (MXL)

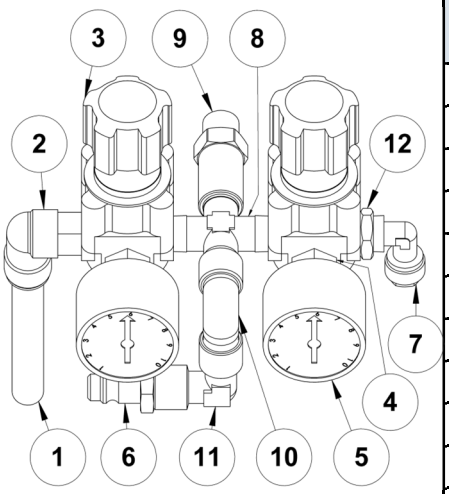

ITEM	PART NO.	DESCRIPTION	QTY
1	0115-010694	Ø12/Ø9mm NYLON TUBE	0.32m
2	0115-010666	Ø12mm-1/4" ELBOW	1
3	ZZ-3073	AIR REGULATOR	2
4	0114-019209	REDUCING BUSH	2
5	GA-382-P	PRESSURE GAUGE	2
6	MPV-10	QD STEM 1/4 BSP M	1
7	0115-010667	Ø8-1/4" ELBOW	1
8	0115-010665	Ø8 CROSS	1
9	0115-010659	MOUNTING STUD	1
10	0114-020027	1/4" ELBOW	1
11	0115-010727	1/4" ELBOW	1
12	DVX-139	1/4" NUT	1

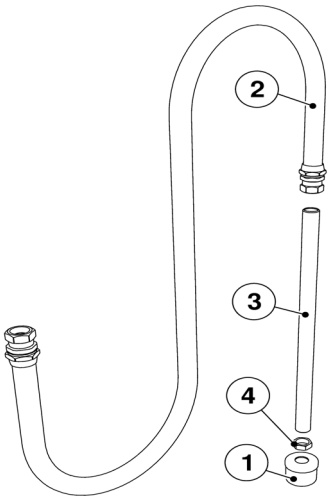

0115-010696 - 1/2" SUCTION HOSE (MXL)

ITEM	PART NO.	DESCRIPTION	QTY
1	0115-010704	1/2" STRAINER 30 MESH	1
2	0115-010698	1/2" HOSE	1
3	0115-010697	TUBE	1
4	0115-010728	NUT	1

ACCESSORIES

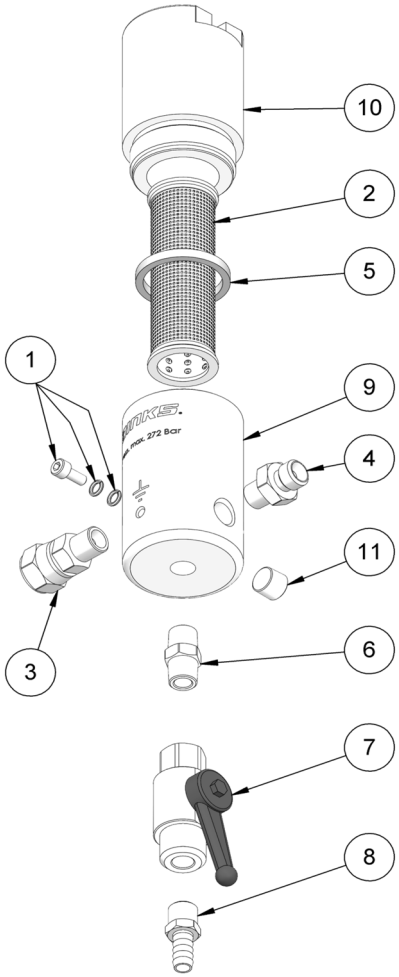

0110-009130 - HIGH PRESSURE FILTER

272 bar Max, 100 MESH
3/8" BSP F INLET, 1/4" NPSM OUTLET

ITEM	PART NO.	DESCRIPTION	QTY
1	0110-009065	GROUNDING CLAMP	1
2	0110-009132	FILTER 100 MESH	1
3	0114-016058	3/8" BSP SWIVEL	1
4	0114-016059	1/4" NPSM NIPPLE	1
5	0114-016061	SEAL	1
6	0114-019090	1/4" BSP NIPPLE	1
7	0114-019091	BALL VALVE	1
8	0114-019985	HOSE NIPPLE	1
9	0115-010398	FILTER HOUSING	1
10	0115-010399	FILTER CAP	2
11	0115-010600	1/4" NPT PLUG	3

ADDITIONAL FILTERS	
0110-009131	50 PLUG
0110-009133	150 PLUG
0110-009134	200 PLUG

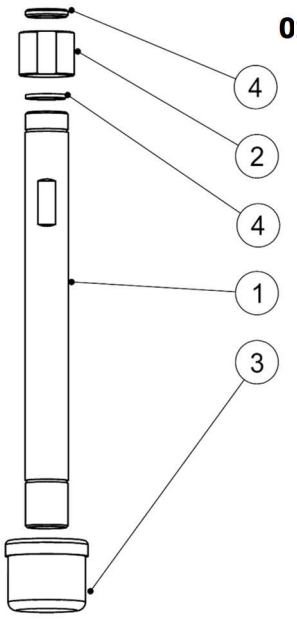

0115-010699 - 1/2" SUCTION TUBE (MXL)

ITEM	PART NO.	DESCRIPTION	QTY
1	0115-010702	SUCTION TUBE	1
2	0115-010703	ADAPTER	1
3	0115-010704	3/4" STRAINER 15 MESH	1
4	0115-010165	SEAL	2

ACCESSORIES

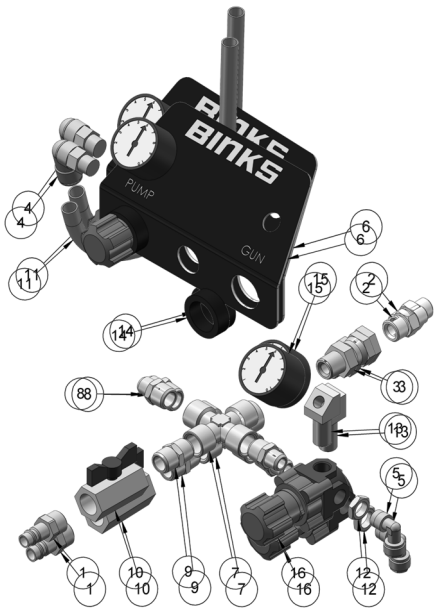

0115-010180 - AIR CONTROLS (MX)

ITEM	PART NO.	DESCRIPTION	QTY
1	0110-009091	QD STEM	1
2	0115-010157	MOUNTING STUD	1
3	0115-010324	3/8" BSP SWIVEL	1
4	0115-010666	Ø12mm-1/4" ELBOW	1
5	0115-010667	Ø8mm-1/4" ELBOW	1
6	0115-010680	PANEL	1
7	0115-010681	3/8" BSP CROSS	1
8	0115-010682	3/8"-1/4" NIPPLE	2
9	0115-010683	3/8" BSP NIPPLE	1
10	0115-010684	BALL VALVE	1
11	0115-010694	Ø12/Ø9mm TUBE	0.32m
12	DVX-139	1/4" LOCKING NUT	1
13	DVX-56	GAUGE BLOCK	2
14	DVX-58	REGULATOR NUT	2
15	GA-382-P	PRESSURE GAUGE	2
16	ZZ-3073	AIR REGULATOR	2

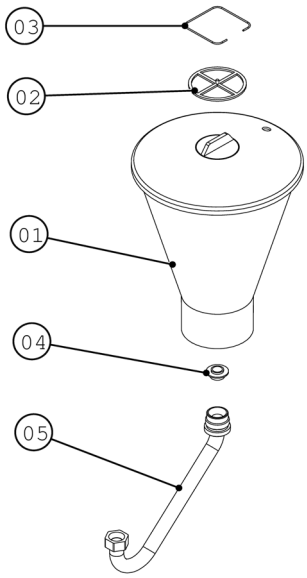

0115-010701 - HOPPER 6L [1.6 US Gal] [1/2" CONNECTION]

ITEM	PART NO.	DESCRIPTION	QTY
1	ZZ-2571	HOPPER	1
2	00-00-0002147	FILTER	1
3	00-00-0002148	TENSION RING	1
4	ZZ-2587	PTFE SEAL	1
5	0115-010707	SUCTION TUBE	1

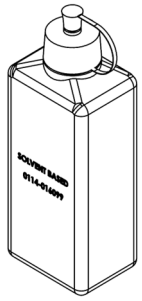

PUMP LUBRICATION

0114-016099	0.25l - LUBRICATION-SOLVENT BASED
0114-016100	0.25l - LUBRICATION-WATER BASED
0114-014871	0.5l - LUBRICATION-WATER BASED
0114-009433	0.5l - LUBRICATION-SOLVENT BASED

ACCESSORIES

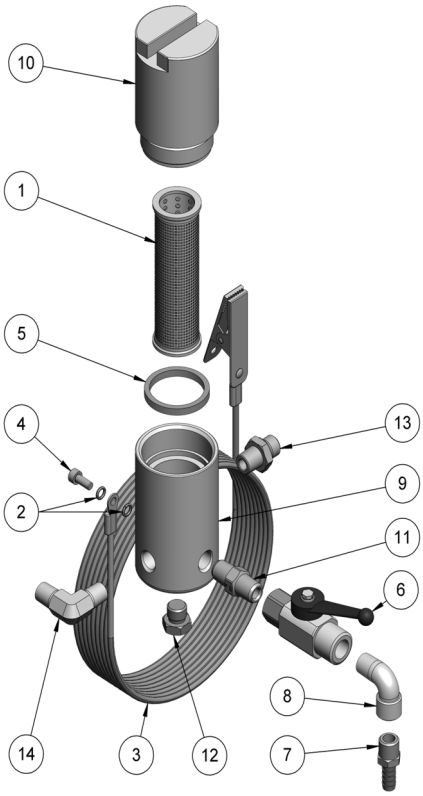

0115-010200 - HIGH PRESSURE FILTER (PAIL)

272 bar Max, 100 MESH
1/4" BSP M INLET

ITEM	PART NO.	DESCRIPTION	QTY
1	0110-009132	FILTER SCREEN 100 MESH	1
2	0114-009743	M5 LOCKWASHER	2
3	0114-011798	GROUND WIRE	1
4	0114-014179	M5 x 12mm SCREW	1
5	0114-016061	SEAL	1
6	0114-019091	BALL VALVE	1
7	0114-019985	HOSE CONNECTOR	1
8	0114-020027	1/4" BSP ELBOW	1
9	0115-010398	FILTER HOUSING	1
10	0115-010399	FILTER CAP	1
11	191969	1/4" BSP-NPT NIPPLE	1
12	192551	1/4" BSP PLUG	1
13	195913	1/4" BSP NIPPLE	1
14	20-2828	1/4" NPT ELBOW	1

ADDITIONAL FILTERS	
0110-009131	50 MESH
0110-009133	150 MESH
0110-009134	200 MESH

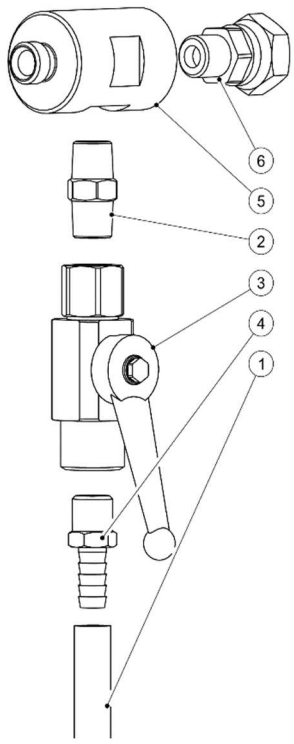

0115-010672 - DUMP VALVE KIT

272 bar Max
1/4"NPSM F SWIVEL - 1/4" NPS M

ITEM	PART NO.	DESCRIPTION	QTY
1	0110-009103	DUMP HOSE	0.6
2	0114-019090	NIPPLE	1
3	0114-019091	BALL VALVE	1
4	0114-019985	HOSE CONNECTOR	1
5	0115-010673	MANIFOLD	1
6	0115-010674	SWIVEL NUT	1

ACCESSORIES

0115-010708 - AIR CONTROL 1 REGULATOR (MXL)

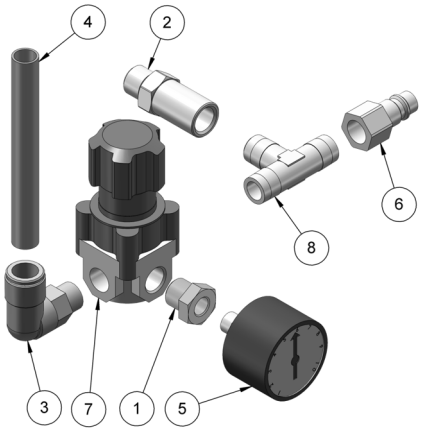

ITEM	PART NO.	DESCRIPTION	QTY
1	0114-019209	1/4"-1/8" REDUCING BUSH	1
2	0115-010659	MOUNTING STUD	1
3	0115-010666	Ø12mm-1/4" ELBOW	1
4	0115-010694	Ø9-Ø12mm TUBE	0.32m
5	GA-382-P	PRESSURE GAUGE	1
6	ZZ-2417	QD STEM	1
7	ZZ-3073	AIR REGULATOR	1
8	ZZ-3077	1/4" BSP FITTING	1

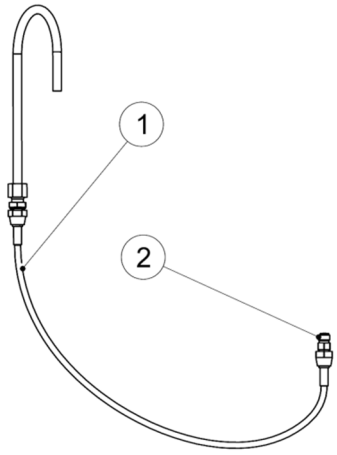

0115-010712 - 1/4" RETURN HOSE

ITEM	PART NO.	DESCRIPTION	QTY
1	DVX-115	DUMP HOSE & TUBE	1
2	195913	1/4" FITTING	1

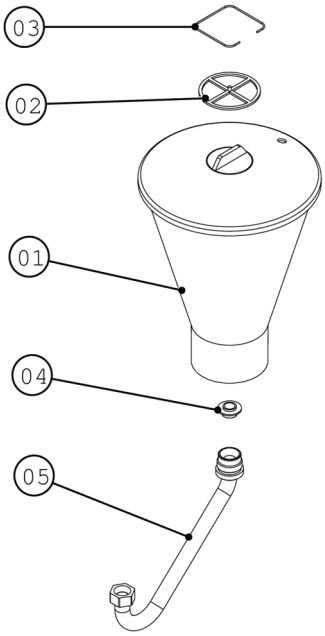

0115-010726 - HOPPER 6L [1.6 US Gal] [3/4" CONNECTION]

ITEM	PART NO.	DESCRIPTION	QTY
1	ZZ-2571	HOPPER	1
2	00-00-0002147	FILTER	1
3	00-00-0002148	TENSION RING	1
4	ZZ-2587	PTFE SEAL	1
5	0114-016041	SUCTION TUBE	1

WARRANTY POLICY

This product is covered by Binks materials and workmanship limited warranty.

The use of any parts or accessories, from a source other than Binks, will void all warranties. Failure to reasonably follow any maintenance guidance provided, may invalidate any warranty.

For specific warranty information please contact Binks.

For technical assistance or to locate an authorised distributor, contact one of our international sales and customer support locations below.

REGION	BINKS CONTACT
Americas	Tel: 1-888-992-4657
Europe, Africa, Middle East	Tel: +44 (0)1202 571 111
India	marketingroa@binks.com
China	Tel: +8621-3373 0108
Korea	Tel: +82313663303
Japan	Tel: +81 45 785 6421
Australia	Tel: +61 (0) 2 8525 7555

WARRANTY PAGE

Binks

Binks is a global leader in innovative finishing technologies. Binks reserves the right to modify equipment specifications without prior notice.
Binks®, DeVilbiss®, and Ransburg® are registered trademarks of Binks US, LLC.

© 2025 Binks US, LLC. All rights reserved.